RCA

Video Cassette Recorder VHS

VCR-1

Service Data

FILE
VCR-1-S1

Supplement
Video Cassette Recorder

Model VCT200

RCA Corporation
Consumer Electronics

Technical Publications

600 N Sherman Dr | Indianapolis, Indiana 46201

SAFETY CAUTION:

Before servicing this chassis, it is important that the service technician read and follow the "Safety Precautions" and "Product Safety Notices", in Service Data File VCR-1 (Model VBT200).

REFERENCE

Model VCT200 is the same as Model VBT200 shown in File VCR-1 (Model VBT200) except for Tape Transport Parts listed in this supplement.

REPLACEMENT PARTS

PRODUCT SAFETY NOTE—Components marked with a (*) have special characteristics important to safety. Before replacing any of these components, read carefully the PRODUCT SAFETY NOTICE on page 2 of Service Data File VCR-1. Don't degrade the safety of the set through improper servicing.

SYMBOL NO.	STOCK NO.	DRAWING NO.	DESCRIPTION
260	144753		Cover — cassette
262	144751		Panel — front
267	144754		Panel — side
273	144752		Panel — rear

Specifications Subject to Change Without Notice

CONSULT YOUR RCA DISTRIBUTOR FOR REPLACEMENT PARTS AND ACCESSORIES

First Edition — First Printing

Copyright 1978 — RCA Corporation | Consumer Electronics
Printed in U.S.A. — Trademark(s)* Registered — Marca(s) Registrada(s)

RCA

FILE
VCR-1

Video Cassette Recorder VHS

Model VBT200

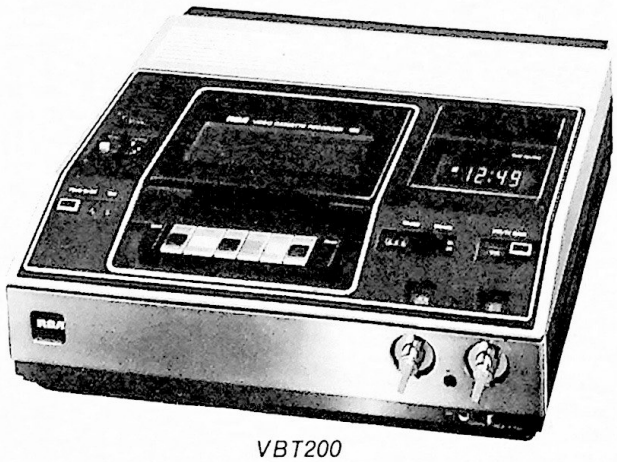

VBT200

RCA Corporation
Consumer Electronics

Technical Publications

600 N Sherman Dr | Indianapolis, Indiana 46201

SAFETY CAUTION:

Before servicing this chassis, it is important that the service technician read and follow the "Safety Precautions" and "Product Safety Notices" in this Service Data.

Service Data Contents

	Page
General Description	
Circuit Descriptions	1-9 thru 33
Cleaning and Lubrication	1-8
Detailed BlockDiagrams	1-41 thru 68
General Information	1-3,4
Mechanism Operation	1-34 thru 1-39
Program Recording	1-7,8
Operating Controls and Functions	1-5 thru 7
Safety Precautions	1-2
Specifications	1-3
Disassembly	
Instrument Disassembly	2-1
Mechanical Disassembly Tape Transport	2-4 thru 7
Parts Identification Tape Transport	2-2,3
Mechanical Adjustments	3-1 thru 11
Electrical Adjustments	
Component Board Location	4-1
Electrical Adjustments	4-2 thru 18
Circuit Boards and Schematic Diagrams	
Audio Circuit Board and Schematic(Late Production)	5-23,24
Audio Circuit Board and Schematic (Early Production)	5-58,59
Chroma Circuit Board Schematic	5-52,53
Chroma Schematic (Late Production)	5-55 thru 57
D.D. Cylinder Motor Drive Circuit Board and Schematic	5-17,18
Demodulator Circuit Board and Schematic	5-41 thru 44
Digital Timer Circuit Board and Schematic	5-16
FM Modulator Record and Head Amp Circuit Board and Schematic	5-33 thru 36
Interconnection Wiring Schematic	5-63 thru 66
Luminance Circuit Board	5-46,47
Luminance Schematic (Late Production)	5-49 thru 51
Luminance Sub Process Circuit Board and Schematic (Late Production)	5-21,22
Luminance Sub Process Circuit Board and Schematic (Early Production)	5-61,62
Partial Chroma Schematic (Early Production)	5-60
Partial Luminance Schematic (Early Production)	5-45
Partial SP/LP Schematic (Early Production)	5-60
Power Supply Circuit Board and Schematic	5-19,20
Regulator and Transport Circuit Board and Schematic	5-25 thru 28
RF Converter Circuit Board and Schematic	5-15
Servo Circuit Board and Schematic	5-29 thru 32
Simplified Block Diagrams	5-1 thru 8
Simplified "Play" and "Record" Circuits	5-9
Small Circuit Boards	5-11 thru 14
SP/LP Circuit Board and Schematic (Late Production)	5-37 thru 40
UHF Tuner Schematic	5-11
VHF Tuner Circuit Board and Schematic	5-10
Exploded Views	6-1 thru 18
Replacement Parts List	7-1 thru 10

Third Edition — First Printing

Copyright 1978 — RCA Corporation | Consumer Electronics
Printed in U.S.A. — Trademark(s)® Registered — Marca(s) Registrada(s)

SAFETY PRECAUTIONS

Before returning any instrument to the customer a safety check of the entire VCR should be made. The service technician must be sure that no protective device built into the instrument by the manufacturer has become defective or inadvertently defeated during servicing.

Comply with all caution and safety related notes located on or inside the VCR cabinet and on the chassis.

WARNING: Alterations of the design or circuitry of this VCR should not be made.

Any design alterations or additions such as, but not limited to, circuit modifications, auxiliary speaker jacks, switches, grounding, active or passive circuitry, use of unauthorized camera, cables, accessories, etc. may alter the safety characteristics of this VCR and potentially create a hazardous situation for the user.

Any design alterations or unauthorized additions will void the manufacturer's warranty and will further relieve the manufacturer of responsibility for personal injury or property damage resulting therefrom.

Do not lubricate any motors. Use only authorized lubricants where lubricants are specified. If you lubricate, remove any excess lubricants.

When reassembling the VCR, always be certain that all the protective devices are put back in place, such as non-metallic control knobs, insulating fishpapers, adjustment and compartment covers/shields, isolation resistor capacitor networks, etc.

When service is required, observe the original lead dress. Components that indicate evidence of overheating or other electrical or mechanical damage should be replaced.

Antenna Cold Check

With the AC plug removed from the 120V AC source, place a jumper across the two plug prongs. Turn the instrument AC switch on. Using an ohmmeter, connect one lead to the jumpered AC plug and touch the other lead to each exposed antenna terminal screw and coaxial connector. The resistance measured should not be less than 1.0 megohm or greater than 5.2 megohms. Any resistance value below or above this range indicates an abnormality which requires corrective action. Repeat the test with the AC switch in the "off" position.

Leakage Current Hot Check (On Completely Assembled Instrument)

Plug the AC line cord directly into a 120V AC outlet (do not use an isolation transformer for this check). Use a Leakage Current Tester or a metering system which complies with American National Standards Institute (ANSI C101.1 "Leakage Current for Appliances") and Underwriters Laboratories (UL) 1410 (50.7). Measure for current with the AC switch "on" and repeat with the AC switch "off" from all exposed metal parts of the cabinet (antenna connections, handle bracket, metal cabinet, screwheads, metal overlays, control shafts, etc) to a known earth ground (waterpipe, conduit, etc.), particularly, any exposed metal part having a return path to the chassis. Any current measured must not exceed 0.5 milliamp. Reverse plug in the AC outlet and repeat test. ANY MEASUREMENTS NOT WITHIN THE LIMITS OUTLINED ABOVE ARE INDICATIVE OF A POTENTIAL SHOCK HAZARD AND CORRECTIVE ACTION MUST BE TAKEN BEFORE RETURNING THE INSTRUMENT TO THE CUSTOMER.

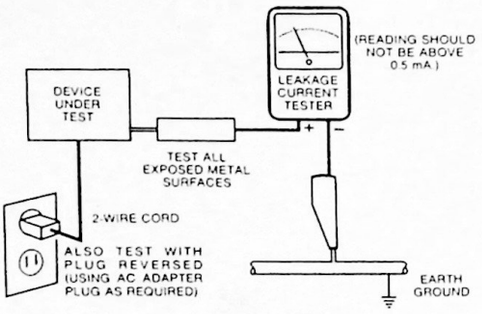

AC Leakage Test

AC Leakage Test

Avoid shock hazards. Do not connect this VCR to a TV antenna, cable or accessory that exhibits excessive leakage currents. If available, the television instrument or cable to which this VCR is connected should have the antenna cold check and the leakage current hot check performed.

Product Safety Notice

Many electrical and mechanical parts in VCR's have special safety related characteristics. These characteristics are often not evident from visual inspection nor can the protection afforded by them necessarily be obtained by using replacement components rated for higher voltage, wattage, etc. Replacement parts which have these special safety characteristics are identified in this Data and its Supplements and Bulletins. Electrical components having such features are identified by shading on the schematics and by (★) on the parts list in this Data and its Supplements and Bulletins. The use of a substitute replacement which does not have the same safety characteristics as the recommended replacement part shown in the parts list in this Data and its Supplements and Bulletins may create shock, fire or other hazards. Product Safety is continuously under review and new instructions are issued from time to time. For the latest information always consult the current RCA Service Data, Supplements and Bulletins. A subscription to, or additional copies of, RCA Service Data may be obtained at a nominal charge from your RCA Consumer Electronics Distributor or from RCA Technical Publications, 600 North Sherman Drive, Indianapolis, Indiana 46201.

SPECIFICATIONS

Power Input	120 Volts AC, 60 Hz
Power Consumption:	45 Watts
Operating Temperature:	5°C to 40°C (41°F to 104°F)
Storage Temperature:	−20°C to 55°C (−4°F to 131°F)
Weight:	17 Kg (37 lbs.)
Dimensions:	485 mm x 394 mm x 176 mm (19" x 15" x 7")
Video Recording System:	Rotary two-head helical scan system Luminance: FM recording Color Signal: Rotary phase converted sub-carrier direct recording.
Video Signal System:	EIA standard, NTSC color signals
Antenna Input Impedance:	VHF — 75 ohms UHF — 300 ohms
Video Signal Level:	1V p-p (140 IRE standard)
Audio Input Impedance:	−20 dB, 100K ohms
Audio Output Impedance:	−6 dB, 600 ohms
Audio Frequency Response:	Two hours −6 dB 100Hz — 8 kHz 3.33 cm/sec. (1.33 in/sec) Four hours −6 dB 100Hz — 6 kHz 1.67 cm/sec. (.69 in/sec)
Tape Speed:	Two hours 33.35 mm/sec. (1.3 in/sec) Four hours 16.67 mm/sec. (.65 in/sec)
Maximum Recording Time:	Four hours (VK250 in LP Mode)
Fast Forward Time:	4 minutes
Rewind Time:	4 minutes

GENERAL INFORMATION

The RCA VBT200 Video Cassette Recorder is a versatile instrument, having many features that are completely new to the servicing industry. The unit is not difficult to operate, and it is easily installed. External connections to and from the recorder are minimal, involving mostly intercept and reconnection of the television VHF and UHF antenna input leads. Necessary connecting cables, matching transformers, and adaptors are included to handle all but unusual installations.

1. A 5 foot, 75 ohm coaxial cable connects from the VHF out terminal on the recorder, to the VHF antenna input on the television receiver. Use cable direct if TV has 75 ohm input; use via 75 to 300 ohm matching pad if TV input is 300 ohm.
2. A 5 foot, 300 ohm flat twin lead connects the UHF out terminals on the recorder to the UHF antenna input on the TV receiver.
3. A 75 to 300 ohm matching pad is used for matching the 75 ohm VHF recorder output to a 300 ohm VHF input on the TV.
4. A 300 to 75 ohm connector/adaptor mates a 300 ohm, twin lead antenna system (outside or rabbit ear) to the recorder 75 ohm, VHF input system.
5. With a combination VHF-UHF antenna down-lead/splitter system, use this adaptor to convert the splitter 300 ohm twin lead to the recorders 75 ohm input connector. (Captive, screw-type lugs are integral to the unit strip and insert the lead wires, then tighten the screws.)

Keep in mind — for different or "odd" antenna systems — the VHF input and output of the VBT200 is 75 ohms, unbalanced; the UHF input and output is 300 ohms, balanced.

Antenna connection instructions should be carefully followed. The recorder produces an RF signal to be transmitted on VHF Channel 3 or 4 (switch selectable). If the recorder output is connected to an antenna (directly or in parallel from the TV terminals), the TV may broadcast a signal. Broadcasting an unauthorized signal could violate certain regulations of the Federal Communications Commission regarding the operation of RF devices. Recheck the installation to avoid any broadcasting possibilities; make sure the shielded lead is used to connect the RF output (VHF) of the recorder to the television set, and that no other connections are paralleled from these terminals.

The physical location of antenna "in" and "out" terminals are depicted in the rear apron photo of the VBT200 (Figure 1). "F" type connectors accept VHF input and output cables; post type connectors (with thumbwheel screw caps) serve for UHF twin lead.

The interface of the antenna system, recorder, and monitor television set is primarily controlled by a single pushbutton switch on the recorder — the TV/VCR input selector. Specifically, the switch system serves to distribute antenna input signals to either the television set VHF tuner or the VCR unit VHF tuner. A simplified schematic is shown in Figure 2.

The recorder VHF input contains a signal splitter; one path to the VCR tuner, the other to a section(s) of the TV/VCR switch. As a general rule, anytime the TV/VCR button is placed in the TV position, the recorder serves only to switch incoming VHF stations to the television set. Notice the other section of the TV/VCR switch terminates the output of the RF Converter (via R2). In the TV position, signal is also applied to the VCR VHF tuner; if power is applied to the recorder, the electronics shown in the blocks are operative, including the RF converter stage. However the RF output is disconnected (from the TV) and terminated via the switch and resistor.

Under the conditions shown in Figure 2 — switch in TV position — the television should operate in the normal fashion for both VHF and UHF reception. (UHF antenna signal distribution is via another splitter network inside the recorder; through the network, UHF is available to both the VCR UHF tuner, and the TV UHF tuner — the latter via the 300 ohm output terminals and connecting leads to the TV input.

Placing the TV/VCR selector switch in the VCR position shifts control of channel selection from the television to the recorder circuits and terminates the TV side of the VHF splitter via the switch and R1. The TV, when tuned to Channel 3 (or 4 as selected) now becomes a monitor for any VHF or UHF station selected with the recorder tuners. All incoming station signals (VHF and UHF) are processed through the TV demodulator in normal fashion, deriving output video and audio signals. These detected signals are coupled to the recorder for signal processing by appropriate record and playback circuits; monitor provisions of the selected signals are accomplished by electronics-to-electronics circuits (E-E) for application to the RF converter stage. Here, the signals are recombined, transmitted at Channel 3 (or 4) RF frequencies, and coupled via the TV/VCR switch to the VHF input of the television set. A two-position input selector — switch (S6303) — tuner/camera — is also shown in Figure 2. When placed in the camera position, incoming signal from the demodulator is disconnected, and the external camera video and audio input jacks located on the back of the instrument are active.

Many electromechanical safeguards are engineered into the unit, to prevent damage in case a "wrong function" is performed by the user. Function buttons for record/play/fast forward, etc., for example, are mechanically interlocked to prevent "invalid" change from one operating mode to another — without first returning to the "Stop" position.

Another safeguard senses any problem with tape transport operation and automatically activates "operation stop." If excessive moisture is detected in the proximity of the head cylinder, the "Dew" circuit prevents operation — and the amber light on the front panel illuminates.

INSTRUMENT REAR VIEW

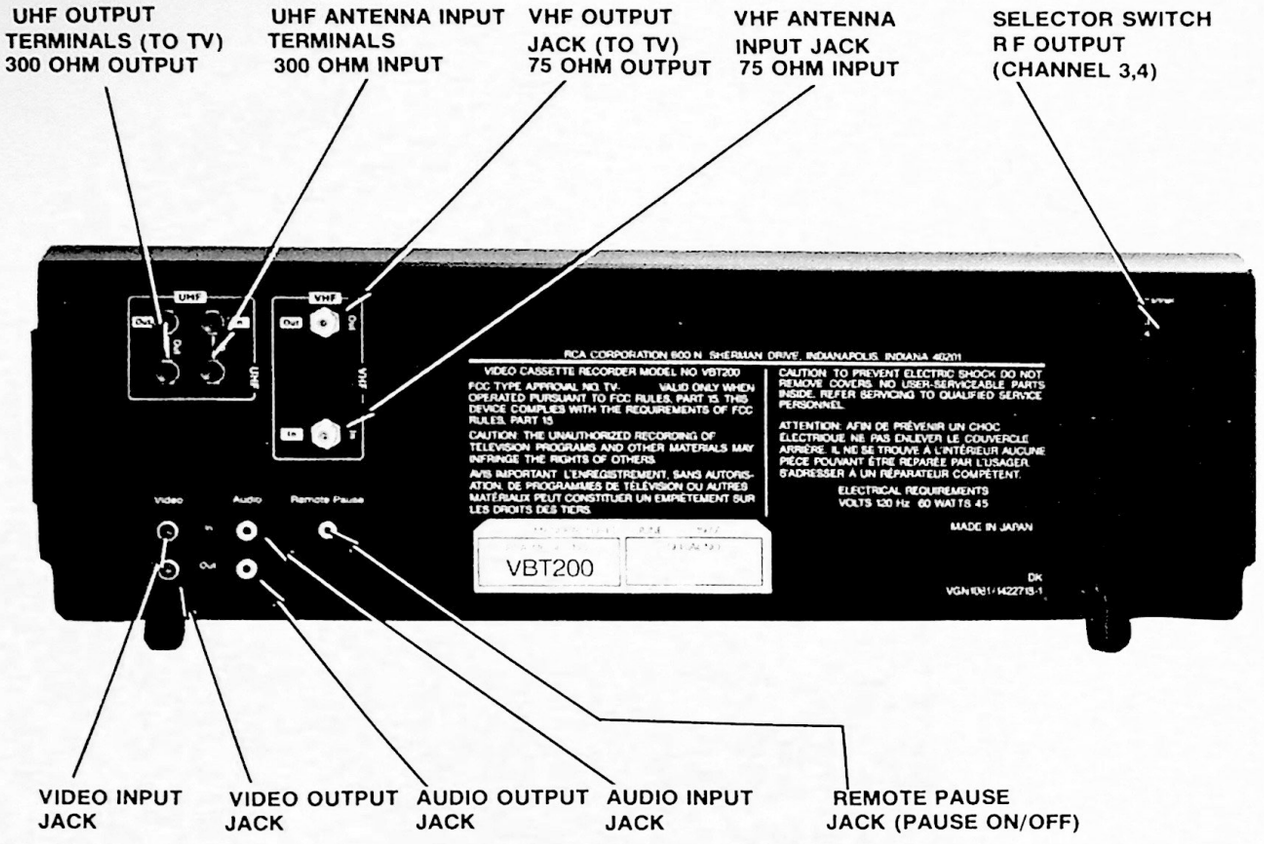

Figure 1. Rear View of VBT 200

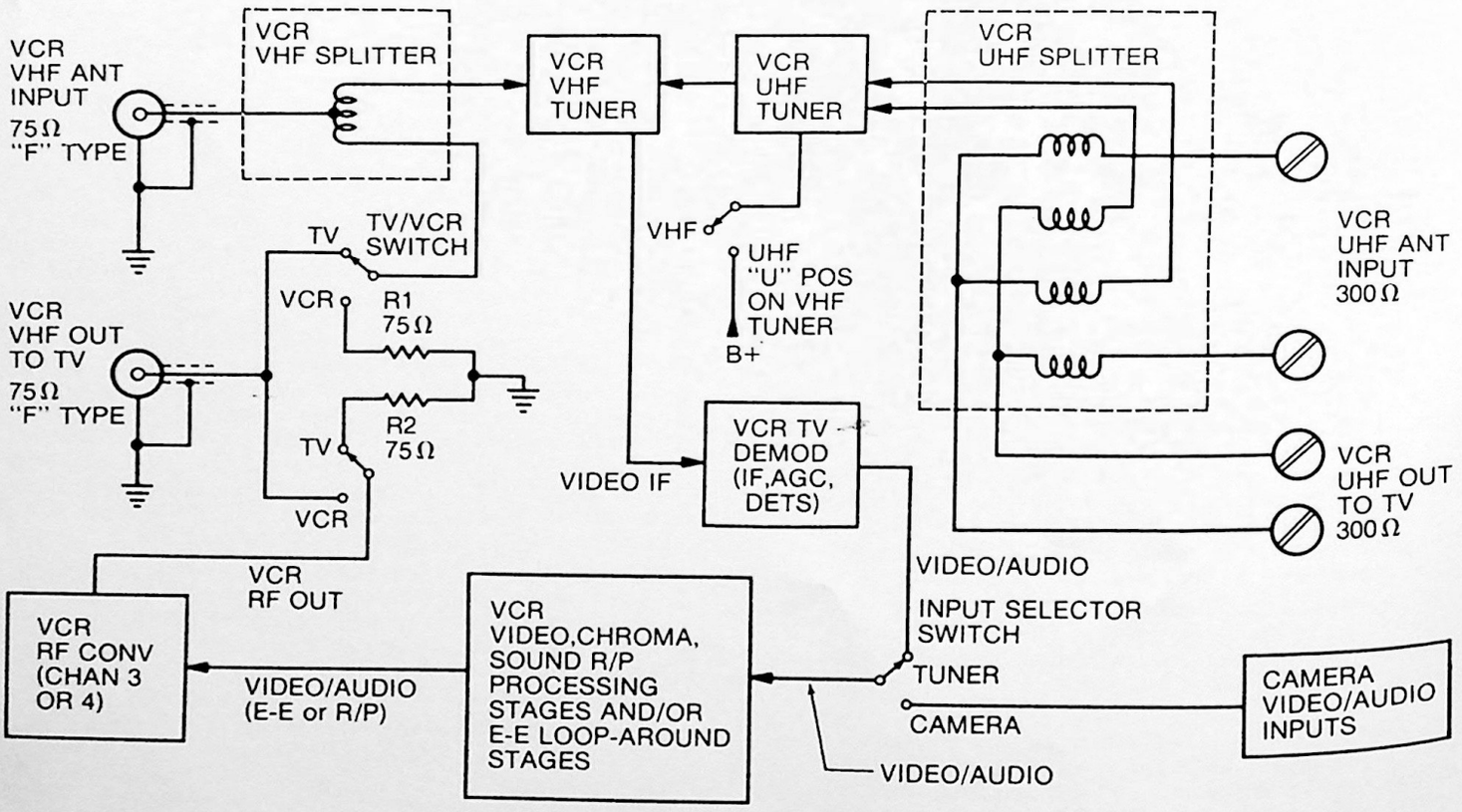

Figure 2. Simplified Schematic of TV/VCR Switch

OPERATING CONTROLS AND FUNCTIONS

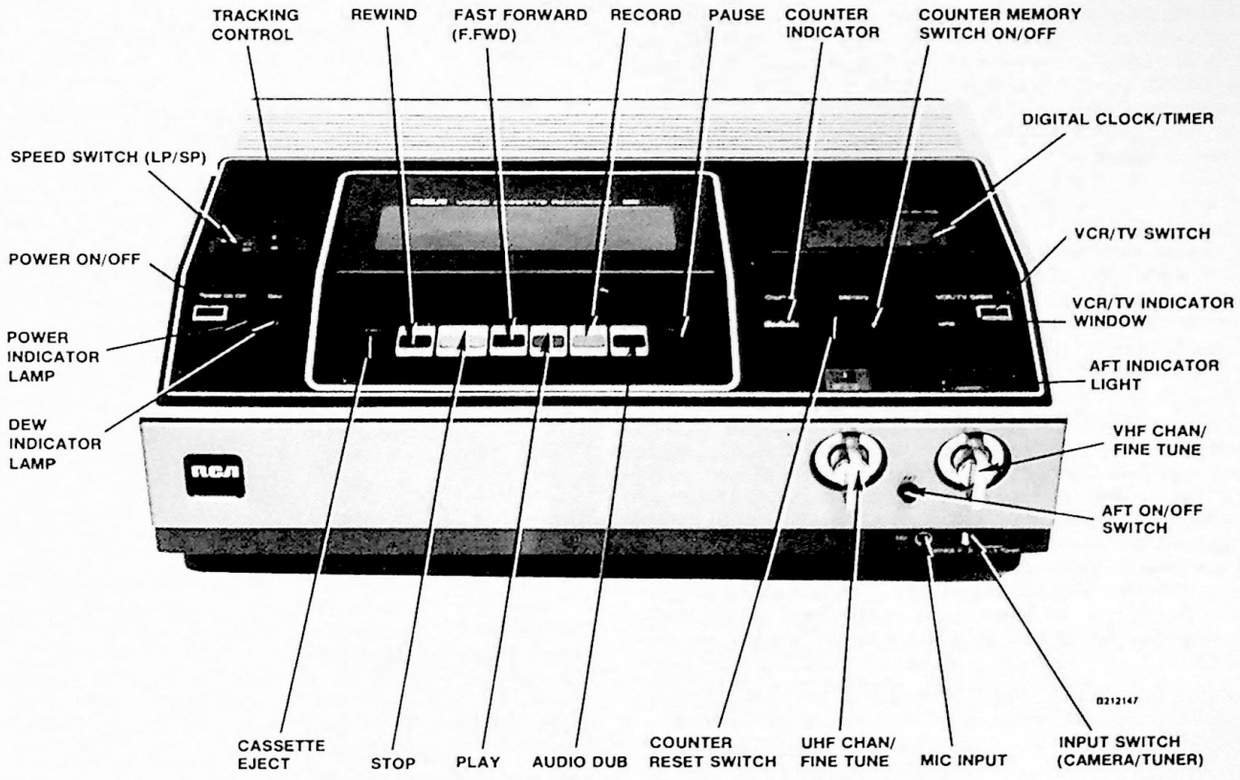

Figure 3. Operating Controls and Function Identification

OPERATING CONTROLS AND FUNCTIONS

Power On/Off

Power is applied to the instrument by pressing the on/off button; pressing the switch once again will remove power. A red indicator light illuminates in the "power on" mode; however, when the clock/timer system is engaged (placed in the timer position), and the power button is depressed, the indicator light will remain "off," until the timer circuit applies power at the preset "turn on" time.

Dew Indicator Lamp

In the event moisture is present in the proximity of the headwheel cylinder the instrument should not — in fact, cannot — be operated. Under these conditions, the Dew Indicator (amber colored light) will glow, and the recorder will not operate — until the moisture level is diminished. A cassette should be inserted, power applied, and the instrument permitted to "dry out," which takes approximately 1 hour — or until the Dew lamp extinguishes.

Speed Switch

The speed switch (S6309) is a two position toggle-type switch located on the top left side of the recorder.

The 2-hour mode is selected by placing the speed switch (labeled SP/LP) to the SP position for "standard play" time (1 hour with a VK125 cassette; 2 hours with the VK250 cassette). When placed in the "long play," LP position, time is extended to 2 or 4 hours with the respective cassettes. Proper selection of the SP/LP switch position is only necessary for the recording function. The proper playback speed is automatically selected via the electronics in the recorder (samples recorded "control track" on tape and automatically selects proper playback speed).

Tracking Control

A variable potentiometer for vernier adjustment of tape/head tracking is provided. The control is normally set to the center position, where a slight detent stop is provided. Adjustment of this control is rarely needed, when playing back a program material recorded to the individual VCR. The tracking control may require adjustment when a cassette is played, which was recorded on a different VCR. The visual indication of mistracking will appear as noise streaks in the picture and/or slight jitter. Merely turn the tracking control in one direction or the other (from center) to clear the picture interference. The control should be returned to its normal center detent position when play is completed.

Eject Key

This key is pressed to raise the tape cassette compartment to the "up" position for loading and/or unloading the cassette. A mechanical "lockout" system defeats the eject function in all operating modes other than the "stop" position.

OPERATING CONTROLS AND FUNCTIONS (continued)

Rewind Key

When the recorder is in the "stop" mode, pressing the rewind key will start tape movement from the takeup to the supply reel. Rewind will continue until the STOP key is manually depressed or the tape is completely rewound on the supply reel (left side of cassette). At this time, a transparent tape strip senses the tape end, and electronically activates the "stop" function — releases the rewind key. A preselected stop, programmed via the counter, is also possible. Placing the counter switch to its "memory" position will cause auto-stop when the counter reaches 999 — permitting selective use of the counter for program location on the tape (more information is given under Tape Counter). If rewind is desired from the play, record, or fast forward mode, the stop key must first be depressed before rewind will actuate.
Note: Always completely rewind the tape after playing or recording use is completed; tapes should not be stored in a partially rewound position for a prolonged period of time.

Stop Key

Pressing the STOP key initiates the unloading operation of the tape mechanism (assuming the VCR was in play or record position). This key should be pressed between any operation selection, and the mechanism permitted to halt completely before engaging another function. Several other sensors — some indicative of malfunctions, some normal conditions — cause "automatic stop" of the recorder. A transparent section of tape is on the start and end of the tape; a small lamp on the transport operates in conjunction with two (2) photocells, and "light transmitting cavities," within the tape cassette to engage end-of-tape stop circuits.

One photocell is located on the supply side of the transport; the other on the takeup side.

One activates the end of rewind, the other functions at the end of forward tape travel. Light from the lamp is blocked from both of the cells unless the transparent tape section — at the beginning or the end of the tape — allows light to be transmitted via the cavity to the appropriate photocell. This arrangement causes auto-stop at the start and end of the tape during rewind or forward operation.

Fast Forward Key

Pressing the FAST FORWARD key advances the tape at a rapid pace. Fast forward time from start to finish of the tape (VK250 cassette) takes approximately 4 minutes. Normal application of this mode is for fast access to desired program material (usually in conjunction with the counter), or to bypass some specific section of the material during playback. As with the rewind function, tape is not loaded. The tape is not in contact with the D.D. (Direct Drive) cylinder. Before the FAST FORWARD key can be depressed, it is necessary to first press the STOP key.

Play Key

The purpose of this key is self-explanatory, anytime Play is depressed, the recorded material on the tape is played back through the VCR electronics (including RF converter) to Channel 3 (or 4) on the television receiver. For playback, the TV/VCR switch must be in the VCR position. Anytime Play is selected, tape loading is actuated and the recorded material from the heads have priority over other inputs (in the VCR position).

Record Key

The RECORD key is pressed and held, then the PLAY key is pressed (down completely to the lock position) to start the recording process. Pressing the Record key alone does nothing.

Several facts should be remembered regarding the operation of the RECORD key:

1. If the play mode has been selected and play has started, the RECORD key is "locked out," and cannot be pressed — unless the Pause key is first depressed. This fact requires a word of caution. It is possible to start play, then press the PAUSE KEY AND THEN PRESS THE RECORD KEY. The result (if pause is released) is full erasure of the program material — usually not desirable except during editing operations.
2. If the erase-prevention tab on the cassette has been removed, the RECORD key (for that matter, the AUDIO DUB key, too) are locked out; pressing either key is impossible.

Audio Dub Key

Audio material from virtually any source can be added to prerecorded material. During camera recording, live audio is available via the built-in microphone in the camera. New audio may be inserted later, if desired, with an accessory microphone; or, background music from a phonograph, radio or tape recorder, inserted through the auxiliary audio input located on the rear of the instrument (Figure 1). Changing the audio portion of the video tape is accomplished by pushing the "PLAY" key and the "AUDIO DUB".

Note: The original audio track will be erased when the recorder is placed in the "Audio Dub" mode. However, the video information on the tape will not be affected.

Pause Key

The pause function can be activated manually (push key on unit), or remotely using the Remote Pause Control cable assembly. When pause is activated (only possible during playback or record), the "tape-unloading" operation is not activated; tape movement is halted, but the tape still maintains contact with the turning D.D. cylinder. For this reason, the pause function should only be used for short periods (10 minutes maximum); as excessive pause duration could cause tape abrasion.

As previously mentioned, the pause feature can be engaged in either the playback or record mode. Activating Pause in the playback mode mutes audio/video, interrupting signal to the television receiver. In the record mode, however, the E-E path is open, and program material is still viewable on the television receiver.

UHF Channel Selector

After placing the VHF channel selector to "U" position, the UHF tuner on the VCR is used to select and fine tune UHF stations — in a familiar manner. The outer knob is used for rapid movement of the tuning assembly until the desired channel number is aligned in the indicator window; the inner knob (knurled) is then used to fine tune the station.

With the TV/VCR switch in the VCR position, the UHF station tuned in on the recorder can be viewed on the monitor television Channel 3 (or 4), and/or recorded on the tape.

The UHF tuner is under control of automatic fine tuning circuitry (AFT) when the AFT switch is placed on.

VHF Channel Selector

VHF stations are also tuned in the familar fashion, using the outer knob to select the desired channel in the indicator window, then pushing in and adjusting fine tuning with the inner knurled knob. AFT should be placed in the off position until fine tuning is completed. As with UHF, with the TV/VCR switch in the VCR position, the selected VHF channel can be viewed and/or recorded.

Optimum reception of either VHF or UHF programs — for viewing or recording — depends on proper tuning of both the VCR and the television tuning system.

Automatic Fine Tune (AFT)

This instrument is equipped with AFT. The circuit is designed to correct the local oscillator frequency in the event of drift, thus preventing any signal tuning error.

Automatic fine tuning is placed in operation by pressing the AFT

OPERATING CONTROLS AND FUNCTIONS (continued)

button; visual indication of "AFT on" is provided by a green indicator lamp. Pressing the AFT button again, defeats AFT and extinguishes the light. During initial tuning adjustments, leave the AFT off until final station tuning is completed.

Mic Input

The microphone input receptacle accepts a standard mic-type plug; input impedance is 600 ohms. The MC-100 is the accessory microphone (optional) available for use with the VBT200. The MIC input finds application in conjunction with the audio dub feature when adding a new sound track; it also accepts microphone input when recording from a camera.

Tuner/Camera Input Selector Switch

The main purpose of this switch is selection of the signal source for recording. Unless a camera system is connected (with the camera video output connected to the VCR video input jack), and the switch placed in the CAMERA position, the recording source will be the VHF/UHF signals from the VCR tuning system.

If recording of video information from another source is desired — another video tape recorder, for example — apply the external signal to the video input jack, place the input selector switch to the CAMERA position, and proceed to record (video will appear on the monitor screen, and audio will be heard if applied via the external audio input jack. (These external input/output jacks are located on the rear of the recorder.

AFT Indicator Light

When the automatic fine tuning circuits are engaged (pushbutton in), this lamp will be lit.

TV/VCR Selector Switch

The primary purpose of this switch is to select the signal to be viewed on the monitor television. Specifically, the switch functions to distribute antenna input signals to either the television VHF tuner or the VCR VHF tuner. In the TV position, incoming station signals bypass the VCR electronics, being directed (via the VCR antenna splitter-distribution system) to the television receiver.

Note: The TV position does not defeat the recording capability of the VCR; off-the-air recordings can still be made, selected with the VCR tuner(s). This feature permits the capability of recording program material on one channel, while enjoying programs on another channel.

Tape Counter

The digital counter in the VBT200 indicates relative position of program material on the tape (if logged during recording or playback); this count is valuable for rapid relocation of material, end of material, amount of unused tape in the cassette, and translation to remaining record time on the cassette.

Memory Switch

Operating in conjunction with the digital counter system, the memory switch permits an automatic stop on rewind to be programmed. For instance, the counter can be set to 000 at the start of a recording at any section on the tape by pressing the reset button. Place the memory switch in the "on" position.

After the recording is completed, with the memory switch on, press rewind. The tape will rewind until approximately the 999 position is reached, then stop — very close to the start of the program just recorded. If further rewind is desired, merely press rewind again, and the tape returns to the tape start position. If the memory switch is off, and rewind started, the tape returns to the tape start position before auto-shutoff is activated by the "photocell" system.

Electronic Digital Clock/Time

A valuable built-in feature of the VBT200 recorder offers a time-of-day digital readout with AM/PM indication, and a programmable timer function. The timer permits unattended recordings to start at a pre-selected time. The timer will automatically switch the VBT200 on at the time selected; at the end of tape supply (unless manually shut off), the recorder will automatically shut off.

Please note these few particulars on the clock/timer unit: If the instrument power was interrupted, the AM or PM indicator will be flashing (if power has returned), requiring that the clock be reset to the correct time of day. When the timer function is engaged (via the timer on/off switch), a red indicator will light, and the clock will then indicate the timer preset time — not, the time-of-day. In the timer "on" condition, power to the recorder is controlled by the timer system, the main recorder power indicator light will be off — even though the main power switch is in the "on" position. Under these conditions — timer on, main power switch on — the recorder cannot be manually operated; power is defeated via the timer — unless the time-of-day clock happens to match the preset time, or the user places the timer switch to the off position.

Three controls are involved when using the digital clock/timer for recording, namely; the timer on/off switch, one clock-set switch (two-position) for time of day, or auto set, and one clock-set switch (two-position) for "stepping" the digital clock fast or slow.

To Set The Clock:

1) Lift cover for access to controls.
2) Set the TIMER switch to "off."
3) Set the clock indicator switch to TIME-OF-DAY position, and
4) Hold ADVANCE switch in FAST position until within 15 minutes of desired time, then move to SLOW position until desired time is reached. Make sure AM or PM indicator is correct.

To Set The Timer:

1) Set the TIMER switch "off."
2) Set the clock indicator control to AUTO SET, and
3) Advance clock with FAST or SLOW switches in same manner as above to the desired time — the recording-start time desired, again checking the AM/PM indicator.

The time-of-day or auto set switch can be left in either position, and if the timer switch is on, power will be applied to the recorder when the time clock reaches the preset start time.

Remember, if the recorder is started by timer control, and the operation is interrupted manually, move the timer switch to off to restore full manual control.

PROGRAM RECORDING

Recording Television Programs

The built-in RF tuners and television demodulator stages permit the recording of program material from any VHF or UHF television channel, while viewing another channel. If desired, the same program being recorded can be viewed through the recorder electronics and monitor means via the RF converter: the television channel selector is tuned to either Channel 3 or 4 (as selected by the rear apron channel switch); the station then selected by the VCR tuner(s) is viewed and recorded.

Basically, the tuning procedure involves:

1. Apply power, tune television to Channel 3 (or 4), place TV/VCR Switch in VCR position; Camera/Tuner Switch in Tuner position.
2. Select station to be recorded with the channel selector on the recorder. Touchup fine tuning as necessary while viewing signal on TV receiver.
3. Start recording when desired, while viewing program being recorded.

PROGRAM RECORDING (continued)

4. To watch a different channel (while recording the other), place TV/VCR Switch to TV position. Select the different channel to be viewed using the television controls.

Recording Camera Signals

Live video and audio recordings are possible using either of the optional cameras for the VBT200; both cameras have built-in microphones and remote power control for start-stop (via the pause function); pressing the camera switch controls the recording start-stop. If desired, a separate microphone can be used in lieu of the camera mike, by connecting to the MIC input jack on the front of the recorder. The MIC input can also be used after the original recording, in conjunction with the "Audio Dub" feature, to add a new audio track on the pre-recorded camera video; background music could be added, by the connection to the Audio Input jack located on the rear of the instrument. However, when the "Audio Dub" feature is used, any pre-recorded audio is erased.

Unattended Recording

The VBT200 is equipped with a built-in electronic digital clock/timer. This feature permits unattended recording at the time preselected by the timer function. The channel to be time-recorded is tuned in, necessary adjustments are performed, recording start time is set, and recording buttons set. When the timer clock reaches the predetermined time, the VCR will automatically turn on and start recording. Unless the recording is manually interrupted "shut off" will be automatic, sensed and activated by a transparent strip at the end of tape supply.

Extended Play/Record Time

The VBT200 Video Cassette Recorder has the capability for either 2- or 4- hours of continuous record or play. Two cassette tapes are available: the VK125 has sufficient tape for up to 2 hours of play/record; the VK250 cassette tape for up to 4 hours, assuming the long-play mode is selected.

CLEANING TAPE MECHANISM

Periodic cleaning is necessary to insure continuous excellent performance of the tape mechanism.

To clean the following parts use "Kim Wipes" and solvent (RCA Stock No. 144592):

1. Capstan shaft
2. Threading Post
3. Limiter Posts
4. Tape Posts
5. Pressure roller
6. All idler wheels
7. All belts
8. Supply and Take-up reels
9. Play roller
10. Rewind roller
11. Flywheel
12. All pulleys

To clean video heads, erase head and the audio control (A/C) head use only the head cleaning kit (RCA Stock No. 144589) and solvent (RCA Stock No. 144592). NOTE: When cleaning the video heads move the cleaning stick in the same direction of head rotation. Wiping in a vertical motion may damage the heads.

LUBRICATING TAPE MECHANISM

The tape transport mechanism is properly lubricated at the factory. In normal use cycles, and with average environmental conditions, additional lubrication should not be required during the first year of operation.

Depending on use and environmental conditions, periodic lubrication may be required. When relubricating, remove old lubricant first, then sparingly apply new lubricant. (Excessive lubricant may be transferred to other assemblies causing malfunction). Use only RCA Stock No. 144590 grease on the following parts after 1000 hours operation:

Loading base #69.
Loading Motor Worm Wheel and Gear Surfaces #79.

RCA Stock No. 144591 oil may be required for the following parts every 1,000 hours.

Capstan Assembly #2
Pressure Roller #20
Rewind Arm Assembly #8
Play Arm Assembly #7
Takeup Reel Table #17
Supply Reel Table #18
Intermediate Pulley #16
Worm Wheel Metal Shaft #79
Supply Inertia (Impedance) Roller #53
Takeup Inertia (Impedance) Roller #60
Loading Gear Metal Shaft #79

Other parts which are not listed above do not require lubrication. except if part is replaced. Use appropriate oil or grease as indicated on section-six exploded views.

CLEANING/LUBRICATION — TUNERS

Manual Cleaning

Remove tuner from chassis and remove tuner shields. Clean the switch rotor and stator contacts with Chlorathene NU, using a 1/4" medium stiffness brush. Chlorathene is a nonflamable, nontoxic cleaner available at RCA distributors and other suppliers. Application of cleaner with vigorous brushing will remove both dirt and previous lubricants. The tuner switches should not be rotated until after sufficient drying time for the cleaner and relubrication.

Careful visual inspection should be made during and after cleaning to locate and repair loose, broken, or otherwise damaged contacts.

The following procedure is recommended for lubricating television tuners. Other lubricants and application methods are not recommended.

Required Lubricants

Antenna, R-F, Mixer and "Function" switch lubricants — use RYKON Grade O-EP manufactured by American Oil Co. (RCA Stock No. 143701).

Application of Lubricants

All switches (Antenna, R-F, Mixer, Oscillator and "Function") should be lubricated on all exposed surfaces of each rotor blade. Rotate the rotor six times in one direction; a reservoir of lubricant will exist between both jaws of contact clips and there should be a film of lubricant covering each rotor blade.

The shaft assembly should be lubricated with RYKON O-EP at front and rear of tuner.

VBT200 CIRCUIT DESCRIPTIONS

The model VBT200 Video Cassette Recorder utilizes the VHS (Video Home System) recording format. This system incorporates several advances in home video recording to deliver excellent performance and high reliability.

The mechanical configuration of the VBT200 is highlighted by use of a direct-drive upper cylinder (headwheel) assembly which is powered by a three-phase AC motor of advanced design. The combination of this motor and a low-mass headwheel assembly are the key to the system stability required for color television recordings of up to four hours. In addition, a very simple automatic tape threading system minimizes tape handling and helps assure long tape life. The mechanical operation of the VCR is controlled by the transport-control electronics circuitry. The remaining circuitry — power supply, signal processing, servo control and SP/LP switching — is the subject of this Operational Description section.

The block diagram (Figure 4) illustrates the various interrelationships among the several sections of the recorder. As shown, video output from either a television receiver type "front end" (TV tuners and TV demodulator) or a direct video input are applied to the recording circuitry. This circuitry consists of separate **luminance** and **chroma record** sections whose outputs are combined in the record amplifier and applied to the video heads.

During playback, the recorded signal from the tape is applied to separate **luminance** and **chroma** playback sections after passing through preamplifier circuitry. The output of these circuits is combined in a video amplifier, whose output is applied to an RF converter. This converter remodulates the video information on either Channel 3 or 4, allowing the playback video and sound to be viewed on a television receiver. A section of the circuit (not shown) samples input video in the record circuit and couples it to the RF converter via part of the playback video amplifier. This configuration called **E-E Mode** (Electronics-to-Electronics Mode), allows the user to monitor the video program being recorded.

Headwheel and tape transport speed control is provided by two separate servo systems called the **Cylinder (Headwheel)** and **Capstan Servo** systems. The cylinder servo system receives reference signals from either vertical sync during recording, or from a master 3.58-MHz oscillator (counted down to 60 Hz) during playback. These signals are compared against pulse-generator (PG) sample pulses (represent the position of the heads) to maintain the exact headwheel speed and position phasing required. Also, during recording, pulses which represent vertical sync are recorded by the control head along the bottom edge of the tape. These serve to synchronize the capstan servo system during playback.

The capstan (tape transport) servo system references instantaneous headwheel position signals against a sample of capstan motor speed frequency-generator (FG) signals to maintain constant tape transport speed during recording. During playback, the instantaneous headwheel position information is referenced

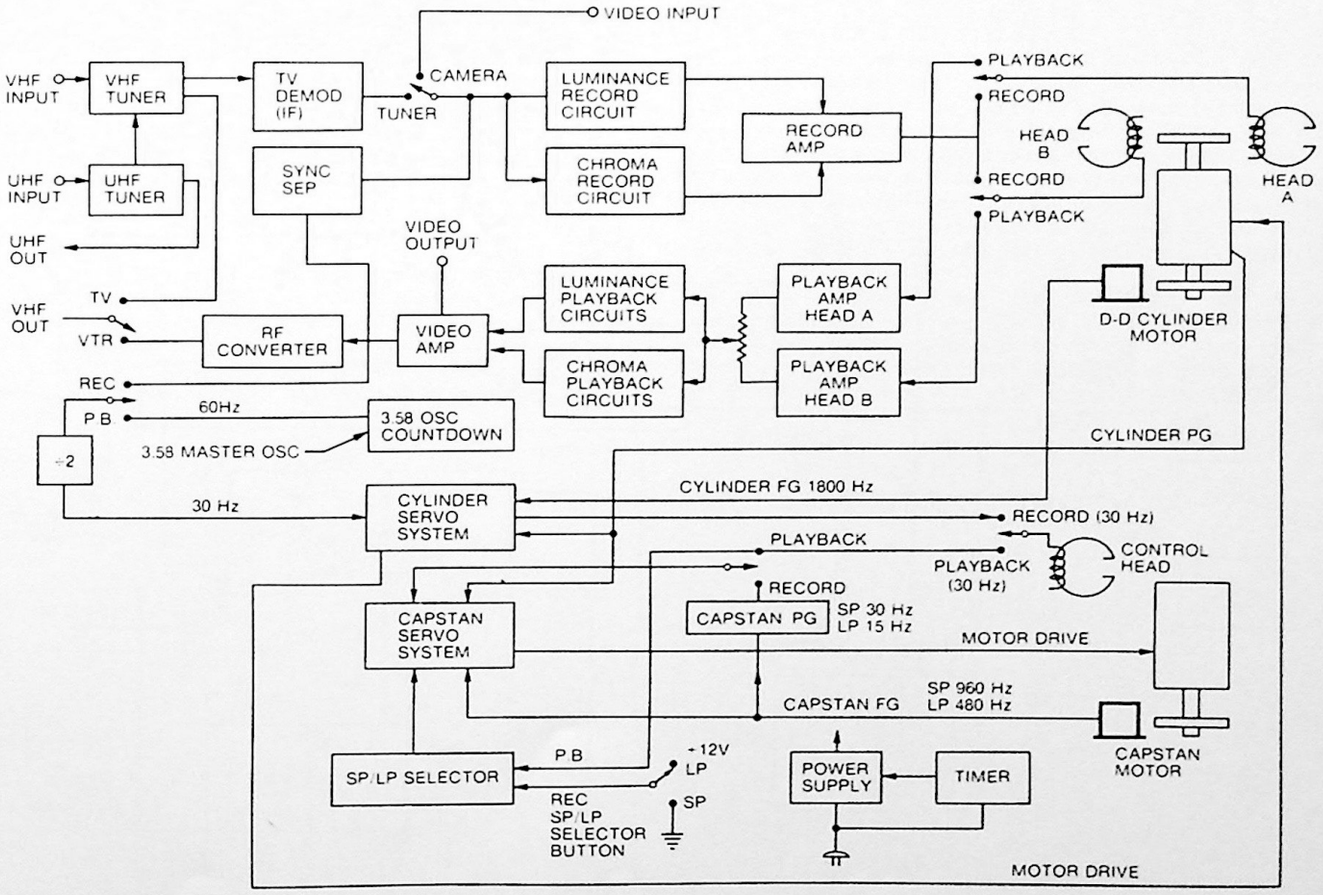

Figure 4. VBT200 Overall Block Diagram

VBT200 CIRCUIT DESCRIPTIONS (continued)

against the control track output signals to provide minute adjustments of capstan speed. In this manner, the tape transport speed is dynamically adjusted to assure that the rotating heads properly align with the recorded video tracks.

The user selects 2-Hour (SP) or 4-Hour (LP) recording modes which determines transport speed during recording. The **SP/LP Selector Circuit** automatically determines the correct transport playback speed by sampling the control track pulse rate.

The **Power Supply Circuitry** converts standard 120V AC 60-Hz line power into three DC supplies for use by the recorder. Power consumption is 45 watts.

POWER SUPPLY CIRCUITS

The VBT200 Video Cassette Recorder power supply (Figure 5) uses a power transformer (T6301) and two bridge-rectifier circuits to develop sources of unregulated 12-volts DC and unregulated 18-volts DC. A third unfiltered supply, using diodes D107 and D108, produces the "power-off detector" supply. This voltage is applied to the Regulator and Transport board logic system to sense a power failure and operate the **stop solenoid** so that the machine is not left in an operating mode in the event that AC power is lost. A second power transformer (T6302) furnishes 16-volts AC and 3-volts AC to operate the digital timer.

AC power for the main power transformer (T6301) and the timer power transformer (T6302) is supplied from the AC line through a 1.6A fuse (F101). Because of the low power demand of the clock/timer, a separate 100-mA fuse (F104) protects the timer power transformer. Other fuses used in the power supply include F102 (3A) which protects the rectifier/filter system producing unregulated 12-volts DC and fuse F103 (3A) which protects the unregulated 18-volt supply.

The illustration "**B+ Distribution — 1**" (Figure 6) shows that the **unregulated** 12-volt supply output is applied to the Regulator and Transport board whereupon it encounters some switching which will be described shortly. This voltage is also supplied to the D-D Motor board where it provides input power to operate the three-phase inverter that ultimately drives the D-D cylinder motor.

The unregulated 18-volt supply is also applied to the Regulator and Transport board whereupon it provides power to operate much of the logic circuitry contained on this board as well as the **stop solenoid.** Also derived from the unregulated 18-volt supply is regulated 12-volts DC which is generated by a series-regulator circuit that utilizes low-level driver circuitry on the Regulator and Transport board, and a power transistor (TR 6301) which is chassis mounted. The regulated 12-volt source appears at the emitter of transistor TR 6301 and is measurable at test point TP 614. It is also interesting to note that the "power-on" indicator (an LED) is powered from the regulated 12-volt source. Thus, from the servicing standpoint, if stop-solenoid action is heard when the in-

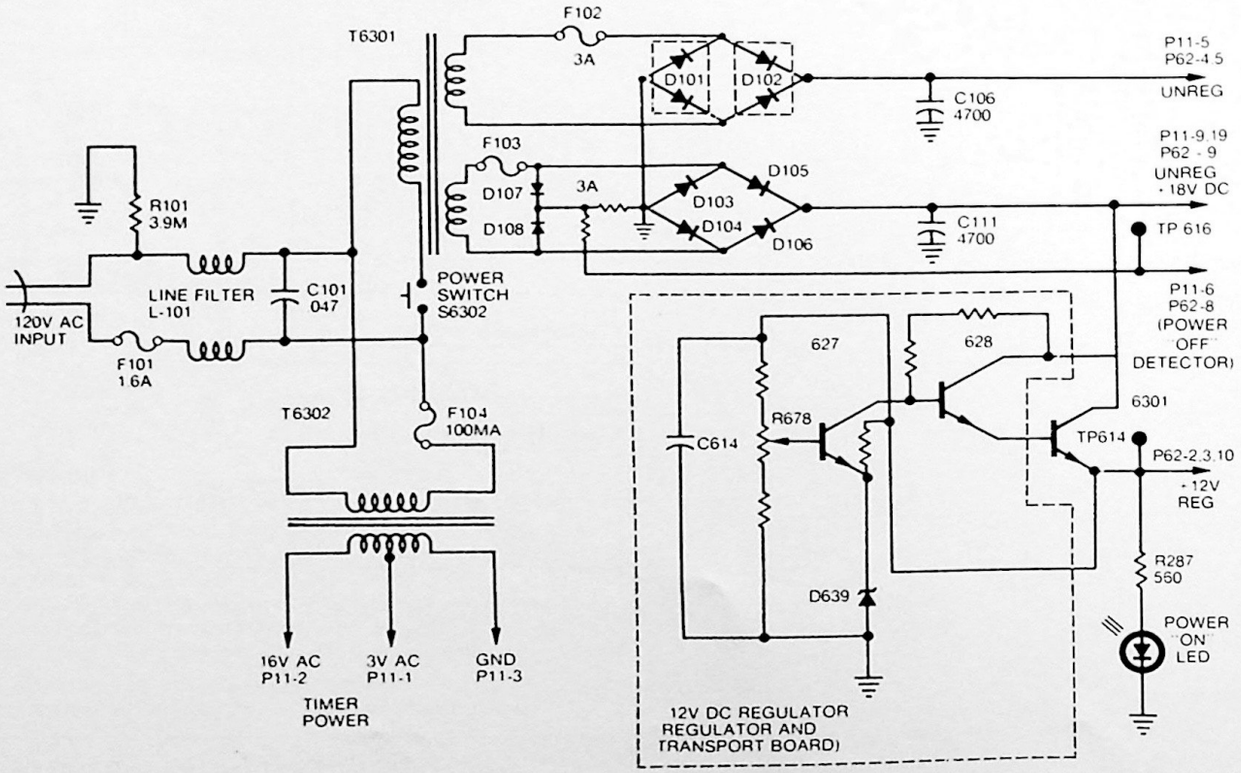

Figure 5. Power Supply and +12V DC Regulator

POWER SUPPLY CIRCUITS
(continued)

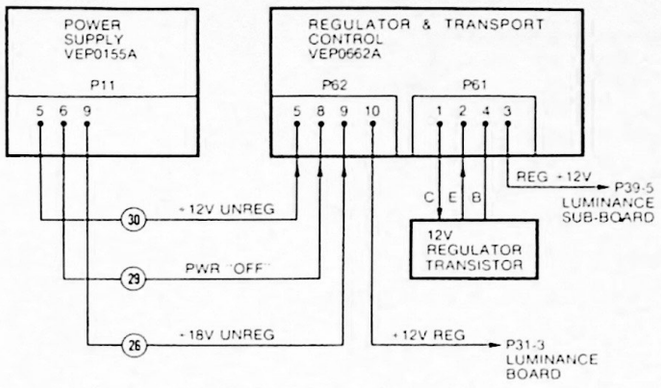

Figure 6. B+ Distribution—1

strument power is turned "on" and "off," but the "power-on" indicator does not come "on," it is indicative of a problem in the regulator circuit because the 18-volt supply powers the stop solenoid and furnishes input voltage to the regulator which ultimately drives the "power-on" LED. It will be found that the majority of the circuitry in the VBT200 instrument is powered from this **regulated** source of **12 volts**. However, as will be learned, the regulated 12-volt source is divided into several subsources through switching and various logic functions.

In summary, the power supply circuit provides three voltages to the Regulator and Transport board. These voltages are +12-volts unregulated, "power-off" indicator voltage, and +18-volts unregulated. These are all directed to the Regulator and Transport board. A driver circuit on this board supplies bias to the 12-volt regulator transistor (TR 6301) which is chassis mounted. Also associated with plug P61 pin 3 is the regulated output of 12 volts from this board which is applied to the Luminance Subprocess board via P39-5.

Referring to the block diagram **"B+ Distribution — 2"** (Figure 7) it can be seen that several additional 12-volt supplies are obtained from the Regulator and Transport board. These voltages, for the most part, are routed to the Servo board. Notable exceptions are that plug P63 supplies 18-volts unregulated to operate the **stop solenoid** as-well-as a source of regulated 12 volts for the Audio board in the machine.

Looking at the B+ sources that emerge from P65 (routed to the Servo board), it can be seen that there are several. Available at pin 1 of P65 is a source of 12 volts that is called **"+12V Loading End."** This voltage becomes available at the completion of loading in the machine because switch S6305 closes at the completion of loading and provides this voltage to the Servo board. Pin 2 output is +12-volts regulated which supplies the majority of the circuitry in the VCR that is common to the Record and Playback modes. Pin 3 supplies +12-volts unregulated which primarily supplies power to the D-D cylinder motor three-phase inverter circuit. A source of voltage known as **"Forward +12 Volts"** is available at pin 6. This voltage becomes available when the FWD leaf switch on the Transport board is actuated by the **PLAY** button. This voltage ultimately is processed into several different sources of "Play" and "Record" voltages. Pin 4 supplies a voltage which is a **"Fast-Forward/Rewind +12-Volt override voltage"** that is sent to the SP/LP Auto Select board. The purpose of this voltage is to inhibit LP motor speed whenever the machine is in "Rewind" or "Fast Forward." Finally, emerging from plug P65 pin 8 is a voltage source known as "capstan-motor on." This voltage becomes available at the instant the **unload-finish** switch (S6304) opens, to signal the capstan motor that the machine has started to load; thus, the capstan motor drive circuitry is enabled so that the motor begins to run.

Transport and Control Switched B+ Circuits

As shown in Figure 8, regulated +12-volts is applied to three leaf switches on the board which are activated by the **PLAY, FAST-FORWARD,** and **REWIND** buttons. Switch S602, designated on the schematic as the FWD switch, is activated when the **PLAY** button is depressed. When the switch closes, the Forward +12-volt supply is made available to the servo section via P65-5. At the same time, closure of the FWD switch produces an input to the loading motor logic that signals the machine to start loading tape. Activation of the "Fast-Forward" or "Rewind" functions closes switches S601 or S603 respectively, and by so doing provides the source of FF/REW +12 volts to the SP/LP board via P65-4. This voltage forces the SP/LP select logic to operate the capstan motor in the SP mode to assure high-speed Rewind and Fast-Forward operation. Also, closure of either of these switches provides "capstan-motor on" logic voltage via P65-3 to the servo section which enables the capstan to operate during Fast Forward or Rewind.

All of these voltages, with the exception of the Fast Forward/Rewind +12 volts, are applied to the Servo board via plug P22. The Servo board, through switching and some delay and logic circuitry, provides several additional switched B+ supplies in addition to routing +12-volts unregulated to the D-D Motor board.

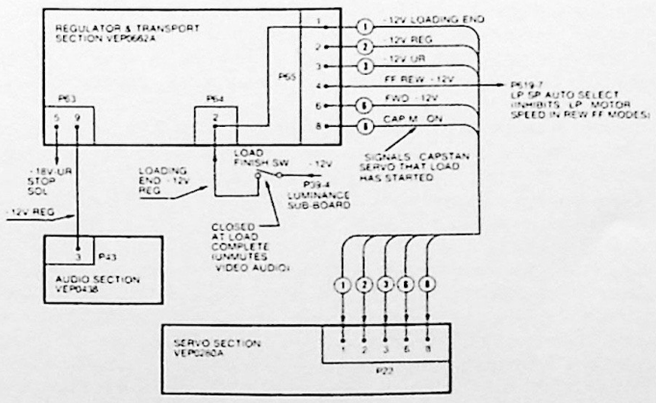

Figure 7. B+ Distribution—2

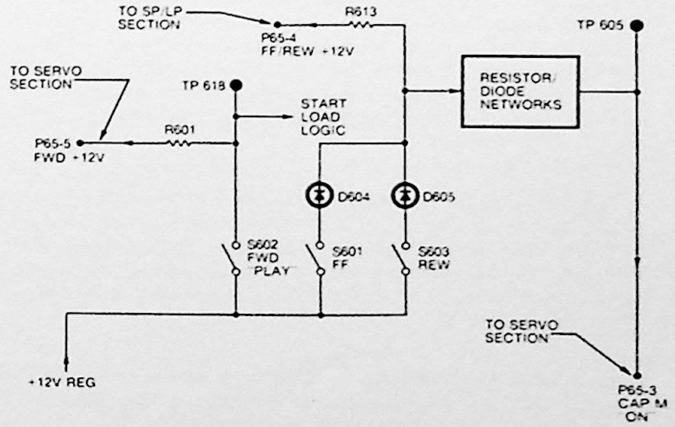

Figure 8. Transport & Control Switched B+ Circuits

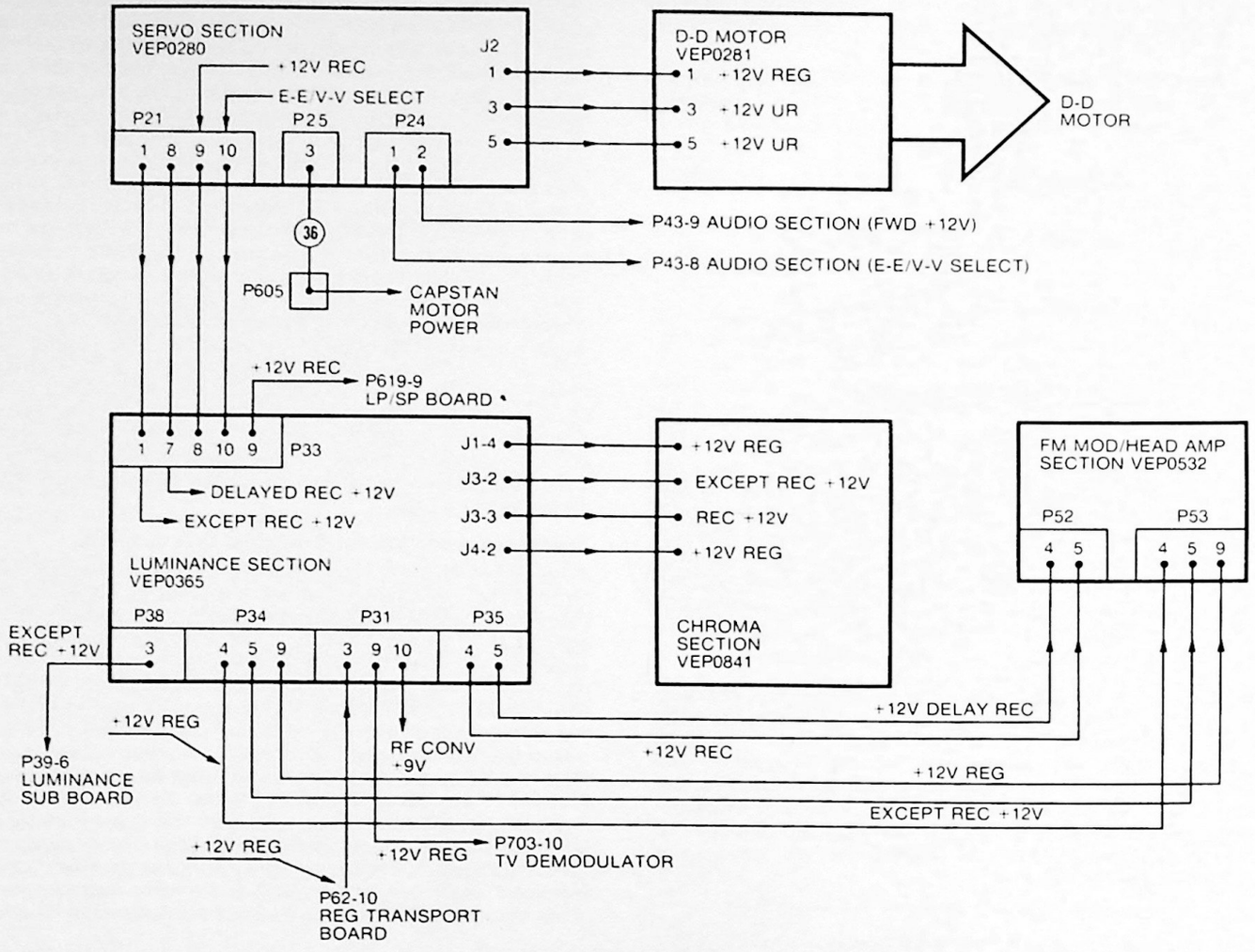

Figure 9. B+ Distribution—3

The illustration, **"B+ Distribution — 3"** (Figure 9) shows a source of voltage called **"Except Record +12 Volts"** is available at P21 pin 1. This voltage source is present in the "Play" or "E-E" modes of operation, but not present in "Record." Pin 8 of P21 supplies a voltage source called **"Delayed Record +12 Volts."** This voltage is supplied a brief instant after loading is completed as signaled by **load-finish** switch S6305. The source of this voltage is logic and time-delay circuitry located on the Servo board which is triggered by the closure of the load-finish switch. The "Record" selection function is obtained by passing this voltage through a section of the Record/Play switch so that the voltage is only present during "Record."

A similar voltage, **"Delayed-Forward +12 Volts"** (supplied to Audio board via P24 pin 2) is provided from the same time-delay circuitry. The only difference is that this voltage does not pass through the Record/Play switch. Consequently, the voltage is available any time the **PLAY** button is depressed — present in "Play" or "Record."

Also, a source of "Record" +12 volts is available from the regulated B+ source via a section of the Record/Play switch on the Servo board. This voltage emerges via pin 9 of P21.

Lastly, at pin 10 of P21 is a voltage known as the **"E-E/V-V Select Voltage."** This voltage is present when the machine is in the E-E mode of operation. Whenever Record or Play is initiated, this voltage source is defeated.

Other voltage sources emerging from the Servo board include the previously mentioned **"Delayed-Forward +12 Volts"** which is supplied to the audio section as well as **"E-E/V-V Select"** voltage which is also supplied to the audio section. Finally, emerging from plug P25 pin 3 is the DC voltage to operate the capstan motor.

The aforementioned "P21" voltages are supplied to the Luminance board via plug P33. As can be seen in the illustration, **"B+ Distribution — 3,"** (Figure 9) the Luminance board serves to distribute these various sources of B+ to other circuit boards in the unit. Power is applied to the Chroma board via the interconnecting wire jumpers that link the Chroma and Luminance board. Additionally, **"Except-Record +12 Volts"** is applied to the Luminance Subprocess board via P38 pin 3. Plug P34 supplies power to the FM modulator Head-Amplifier section of the machine. The same is also true of P35 pins 4 and 5. The Luminance board also supplies **+12-volts regulated** via P31 pin 9 to power the TV demodulator. Pin 10 of the same plug furnishes **+9 volts** for the RF Converter board.

POWER SUPPLY CIRCUITS (continued)

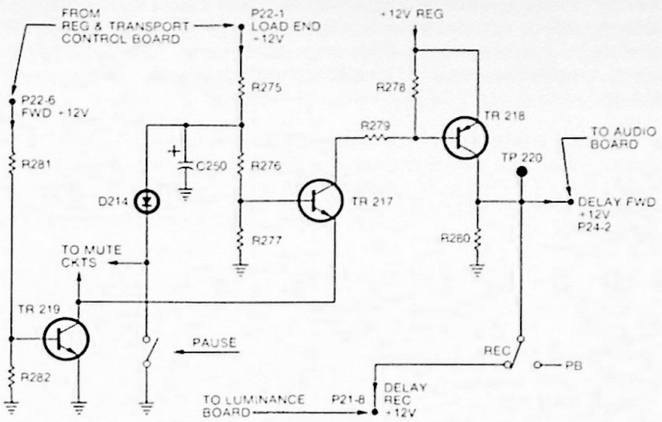

Figure 10. Servo Board Delayed B+

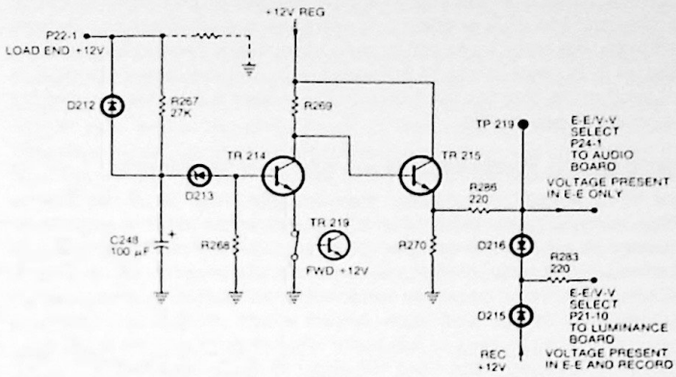

Figure 11. B+ Distribution E-E/V-V Select

Delayed B+ Source

As previously mentioned, the VCR uses two delayed voltages which are provided in order to allow the system to stabilize before Record or Playback is initiated after loading. The illustration, **"Servo Board — Delayed B+"** (Figure 10) shows the origin of these voltages. Basically, transistor TR 218 is an electronic switch which is gated by the combined action of TR 217 and TR 219. Whenever transistor TR 217 is conducting, as will be described, the collector of transistor TR 218 provides a source of **"Delayed-Forward +12 Volts"** to the Audio board via P24-2. This same voltage is fed to a section of the Record/Play switch on the Servo board so that the source of **"Delayed-Record +12 Volts"** is generated whenever the machine is in the "Record" mode. This voltage is applied to the Luminance board via P21-8.

Transistors TR 217 and TR 219 are connected in a logic configuration so that they can sense and "AND" together the **FWD (forward) +12 Volts** which is generated when the **PLAY** button is depressed together with the **Load-End +12 Volts** which becomes present at the completion of loading through closure of the load finish switch (S6305). Notice that base bias for transistor TR 217 is furnished via the load end +12 volts and R275. However, the transistor cannot conduct through the collector circuit of TR 219. Thus, TR 219 must also be conductive before transistor TR 217 can turn "on." Base bias to turn "on" transistor TR 219 is obtained from the **FWD +12 Volts** via R281. Thus, when FWD +12 volts is available and **Load End +12 Volts** is available, TR 217 turns "on" and thereby switches "on" transistor TR 218, making the aforementioned delayed B+ sources available.

Also associated with the delayed B+ source is an interface with the **PAUSE** switch (S604). As shown in Figure 10, the **PAUSE** switch, in addition to stopping the transport operation, also interfaces with the mute circuitry. But more relevant to this circuit area is some additional time delay provided by C250 in the base circuit of TR 217. Notice that when "Pause" is initiated (**PAUSE** switch closed), capacitor C250 is discharged through diode D214 and the base of transistor TR 217 is effectively grounded which removes the Delayed-Forward and Delayed-Record B+ sources. When the **PAUSE** switch is "open," a slight time delay provided by the RC constants of R275 and C250 delays the rise in B+ voltage at the collector of TR 218 long enough that the tape transportation again stabilizes before "Record" or "Playback" is permitted.

E-E/V-V Select

The illustration, **"B+ Distribution — E-E/V-V Select"** (Figure 11) shows an emitter-follower transistor (TR 215) that is powered from the +12-volt regulated supply to provide a switched source of bias to operate electronic switches on the Audio and Luminance boards that either select the E-E (monitor) mode of operation or allow the machine to function in Playback (V-V). When the instrument is in the monitor mode, transistor TR 215 is conducting and consequently supplies "E-E Select" bias to the Audio boards via plug P24 pin 1, and via diode D216 and P21-10, the voltage is supplied to the Luminance board. When the machine goes into the "Record" or "Playback" mode, the "E-E Select Voltage" is turned "off," allowing the machine to function in Play or Record. Notice that in the "Record" mode, diode D215 supplies **Record +12 Volts** to the same circuitry on the Luminance board which is active for "E-E" mode operation. This means that this particular circuitry must be deactivated when the machine is in the Playback mode. Base bias (control voltage) for transistor TR 215 is obtained from another device (transistor TR 214) which implements an "AND" logic function between the **Load End +12 Volts** and the **Forward +12 Volts.** Notice that base bias for this device is supplied via an RC time-delay network from the Load End +12-volt supply and that the emitter of the device is grounded via the collector/emitter circuit of TR 219 which conducts when **Forward +12 Volts** is available. Thus, in actual operation, depressing the **PLAY** or the **RECORD/PLAY** buttons immediately causes conduction of transistor TR 219 when **"Forward +12 Volts"** is applied from the leaf switch on the Regulator and Transport board. At the completion of loading, capacitor C248 charges through R267 until sufficient voltage is present on the capacitor, at which time zener diode D213 conducts and drives the base of transistor TR 214 into saturation, causing the collector of this device to go low, remove base bias from TR 215, and turn it "off."

The time-delay action provided by R267 and C248 delays the transition from "E-E" (monitor) mode into the "Record" or "Play" mode for a period long enough to allow tape transportation to stabilize.

RECORD/PLAY CIRCUIT OPERATION

This section explains the elements of operation of the Record and Play electronics of the VBT200 VHS 2/4 Hour Video Cassette Recorder. Through the use of block diagrams and other supportive illustrations, this section will acquaint the VCR service technician with the basic concept of the video signal processing system used in this instrument. Additional explanation and illustrations will familiarize the technician with the systems signal path and it's associated test points.

Comparison Between 2-Hour and 4-Hour Modes

The VHS standard for tape interchangeability is in the 2-hour mode of operation. (Most machines will allow interchange of 4-hour mode tapes.) When operating the VBT200 machine in the 2-hour mode, 38 micron wide video tracks are layed down with a 20 micron guardband between tracks. The VHS standard employs a mechanical design and tape speed which allows alignment of horizontal sync pulses in adjacent video tracks on the tape. Horizontal sync pulse alignment is desirable because it minimizes the effect of any slight mistracking due to the fact that adjacent fields of a picture (tracks) have similar signal content.

Standard in the VHS format is a technique known as "6-dB burst-up." Basically, increasing the amplitude of color burst when it is recorded minimizes chroma phase distortion during playback that could result from attenuation of burst.

A technique known as color subcarrier rotation is used in the VHS standard to allow a means of processing the color signal to eliminate crosstalk components that are introduced due to slight mistracking. This circuitry is extremely sophisticated and complex, so at this point it will suffice to say that it is a desirable feature that significantly enhances the color picture quality.

As will be seen, a special FM interleave technique is used in the 4-hour mode to eliminate a beat pattern that could be produced by interaction of nonsimilar crosstalk with the RF head signal. This circuitry is nonoperative when the machine is used in the 2-hour mode in order to make it compatible with the basic VHS tape standards.

Enhanced video signal-to-noise ratio is achieved if the high frequencies of the video signal are boosted during "Record" and then rolled off during playback; thus, a nonlinear video emphasis network boosts high frequency video approximately 2 to 3 dB in the 2-hour mode.

When operating in the 4-hour mode, linear tape speed is cut in half. Because of this, the guardband between adjacent tracks disappears — in fact, a portion of the previously recorded track is erased each time the video head lays down a new one. Consequently, the video track width is reduced to 29 microns (approximately 30% reduction). Because of this, the video head RF signal is lower in the 4-hour mode. This means that there is a slight degradation in signal-to-noise performance which is virtually unnoticeable on a normal TV set.

Because the linear tape speed has been reduced, the physical parameters of the machine no longer allow horizontal sync pulse alignment when the machine is operating in the 4-hour mode. Under this condition, it is possible for a crosstalk component to contain the 3.4-MHz black sync tip information and beat with the predominantly white area of the picture producing a beat component that approaches 1-MHz in frequency. Due to the azimuth recording technique which reduces luminance crosstalk by about 18 dB and the FM interleaving technique used in 4-hour operation, the effect of this beat is made unnoticeable on the TV screen.

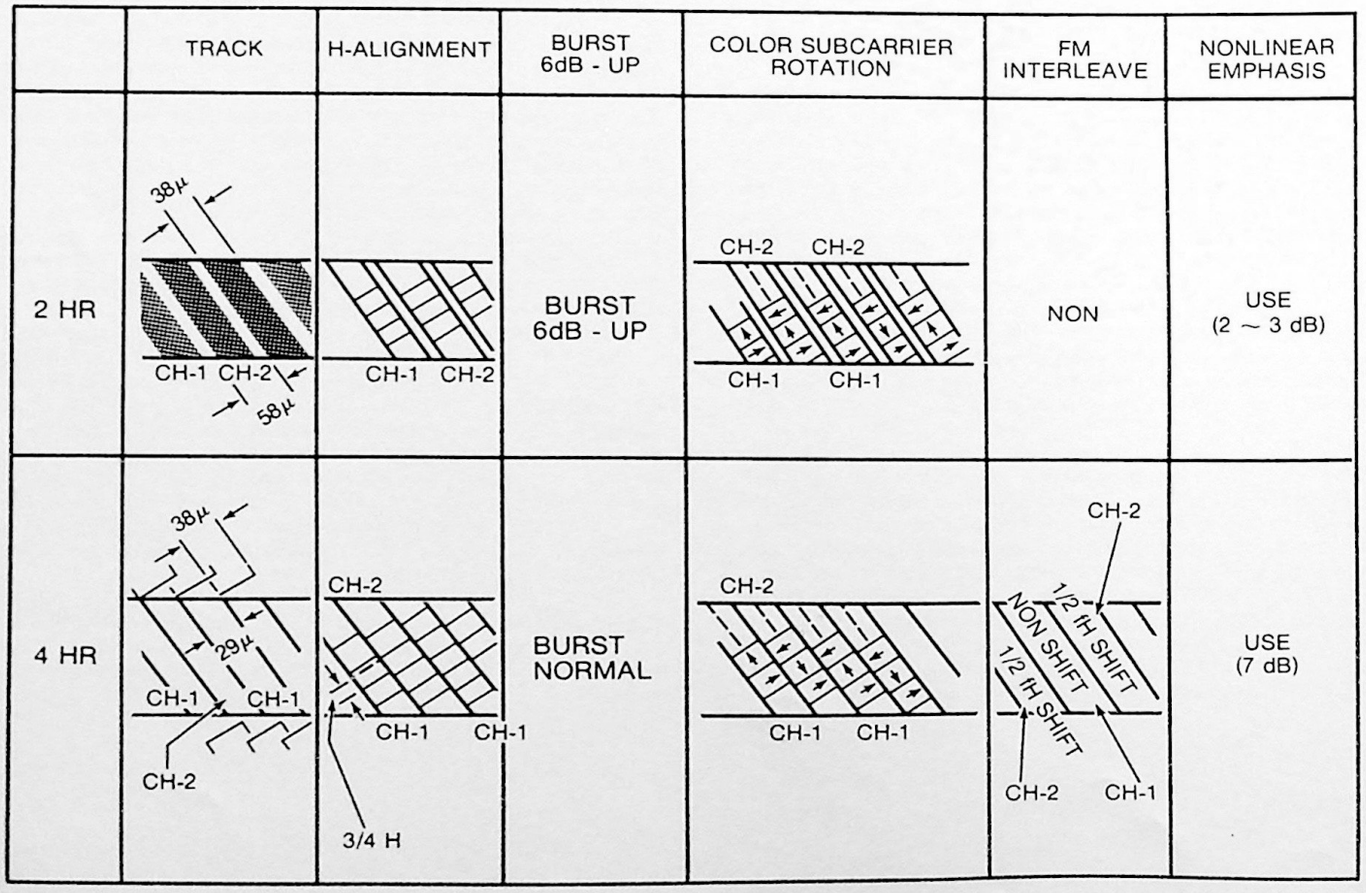

Figure 12. Comparison Between 2-Hour and 4-Hour Operation

RECORD/PLAY CIRCUIT OPERATION (continued)

To prevent the possibility of beats in the color due to "non-H alignment," 6-dB burst boost is not used in the 4-hour mode. However, careful consideration has been given to circuit design in this machine to allow normal operation without the burst-boost circuitry — the color subcarrier rotation technique is also used in the 4-hour mode.

Frequency interleave circuitry is used for 4-hour operation to cancel the beat that is introduced due to crosstalk pickup of a frequency differing from the main signal luminance frequency. Basically, the channel-1 head records video frequencies at signals ranging from 3.4 MHz plus ½ frequency H (7875 Hz) to peak white 4.4 MHz plus 7875 Hz. The channel-2 head records basically 3.4 to 4.4 MHz. By introducing this half a horizontal line frequency offset in the FM modulator frequencies, it is possible to create a condition where the beat pattern on adjacent lines are out of phase so that there is optical cancellation of this slight beat at normal viewing distances. Because video track width is reduced and head output is lower, additional nonlinear emphasis (7 dB) is used to improve the signal-to-noise performance of the machine in the 4-hour mode.

A user switch selects 2-hour or 4-hour operation during "record." When the tape is played back, special logic circuits sense the control track frequency and switch the operating speed accordingly. The actual circuits involved in the 2-hour, 4-hour switching will be more apparent as the reader studies the following text and block diagrams.

Signal Circuit — "Record"

As shown in the simplified Signal Circuit Block Diagram (Figure 13), during video recording, video signal (1-volt negative sync) from either the internal TV demodulator package or an accessory camera is applied to the input of the machine where it follows separate luminance and chrominance paths. The luminance, or black and white video portion of the signal, enters an AGC amplifier where its level is regulated to remove any variations due to differences between signal input. This regulated signal then passes through electronic-switch selectable 2-hour or 4-hour emphasis circuits which boost the high frequency component of the video signal. The signal emerging from the emphasis network contains overshoots which are clamped to specified levels by black-level and white-level clamps.

The output of the clamping circuits is thus video signal with specified overshoots. This signal is applied to the FM modulator which is basically nothing more than a flipflop that operates at 3.4 MHz when an input voltage corresponding to sync tip level is present. As the video signal drives the modulator, its frequency approaches 4.4 MHz. FM modulator output is applied to a record amplifier which boosts the signal level to that required to drive two video heads which are connected in parallel during "Record."

In the 4-hour operating mode, a 30-Hz squarewave signal is supplied to the FM modulator to shift the DC level of the video signal up on alternate fields. This action raises the modulating frequen-

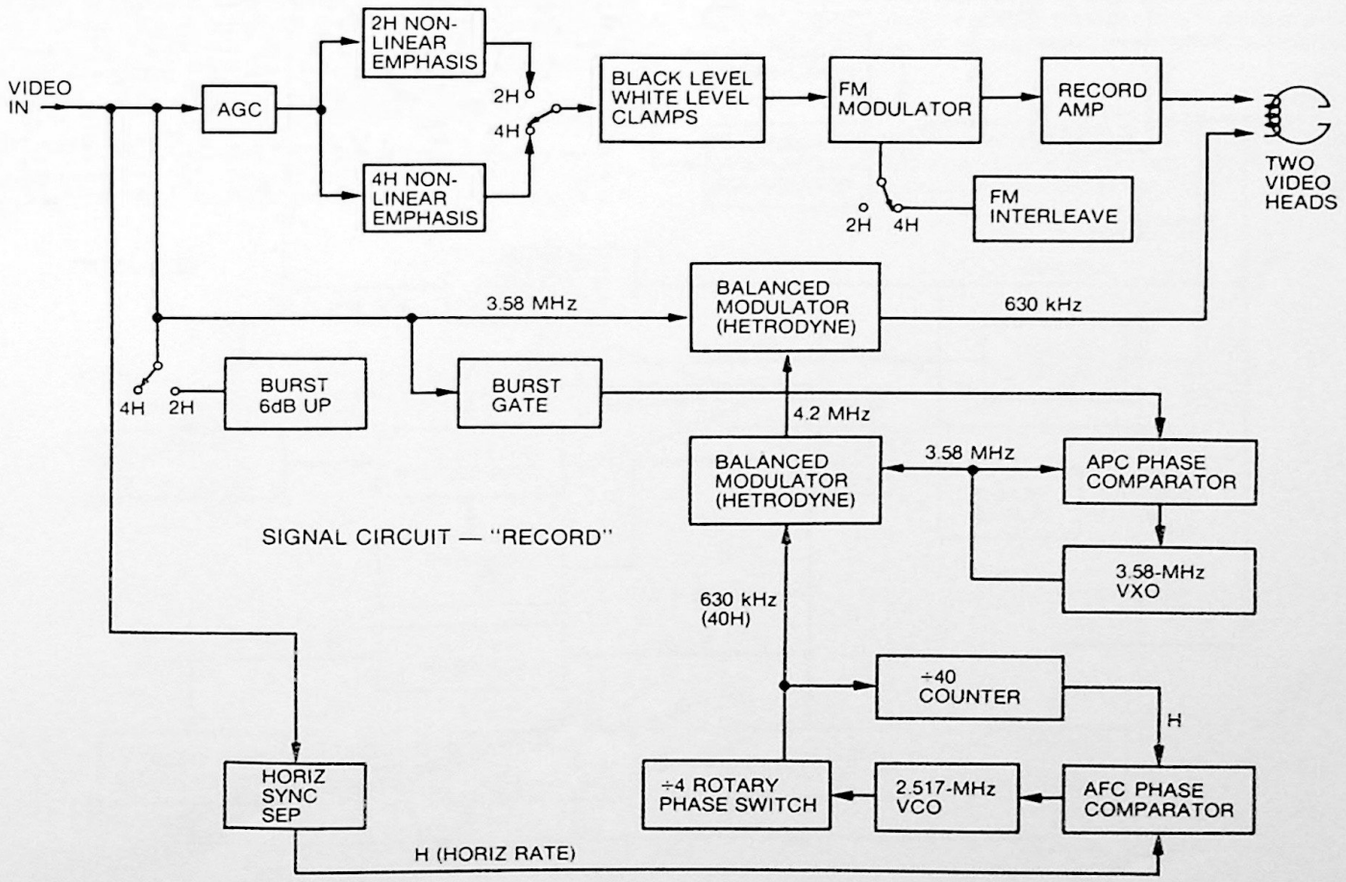

Figure 13. Signal Circuit "Record"

RECORD/PLAY CIRCUIT OPERATION (continued)

cies by the ½-frequency H (7875 Hz) interval necessary to minimize luminance beats caused by nonhorizontal sync pulse alignment.

The chroma signal, after passing through some bandpass filtering to remove the luminance component, is applied to a balanced modulator where it is hetrodyned against a 4.2-MHz signal. The difference between these two signals is 629 kHz which thus becomes down-converted chroma. This signal is mixed with the high level luminance signal so that the luminance FM is used as bias to record chroma — much like an audio tape recorder. During "Record," burst is separated from the incoming chroma and applied to an APC comparator much like that of a TV set. This action phase-locks a 3.58-MHz VXO (Variable Crystal Oscillator) so that it produces a 3.58-MHz CW signal which is applied as an input to a second balanced modulator. The other input to this balanced modulator is 629-kHz CW manufactured by a special VCO (Voltage Controlled Oscillator) oscillator and counter circuit. Balanced modulator output is the sum of the 3.58-MHz input and the 629-kHz input which is roughly 4.2 MHz needed to drive the second balanced modulator that down-converts chroma.

During "Record," the video signal is applied to a horizontal sync separator to provide horizontal sync that phase locks a 2.517-MHz VCO (Voltage Controlled Oscillator) to a multiple of 160 times the horizontal line frequency. Output from the 2.517 VCO is divided by 4 in the rotary phase switch (÷ 4 counter). Counter output is 629-kHz CW that phase changes line by line as the video is recorded or played back. One of the 629-kHz signals is divided by 40 and is compared against horizontal sync in a TV-type AFC. The control voltage output from the AFC circuit, circuit locks the 629-kHz CW signal to horizontal sync.

Signal Circuit — "Play"

In playback, the two video heads feed individual preamps which are turned "on" when the particular head is in contact with the video tape. Preamplifier output is summed together into a continuous RF signal prior to entering separate luminance and chroma circuits.

The luminance (black and white signal) is 3.4- to 4.4-MHz FM which is applied to limiter stages that remove all amplitude variations including the chroma signal content. Limiter output drives an FM demodulator which recovers the original black and white video signal complete with the overshoots introduced by the record emphasis. In order to correct frequency response of the video signal (and attenuate high-frequency noise), the signal is passed through appropriate de-emphasis networks which are switchable for 2-hour or 4-hour operation. After de-emphasis, the video signal passes through some noise cancellation circuitry and emerges as 1-volt p-p negative sync video to drive the RF converter in the instrument to provide channel -3 or channel -4 output to a television set.

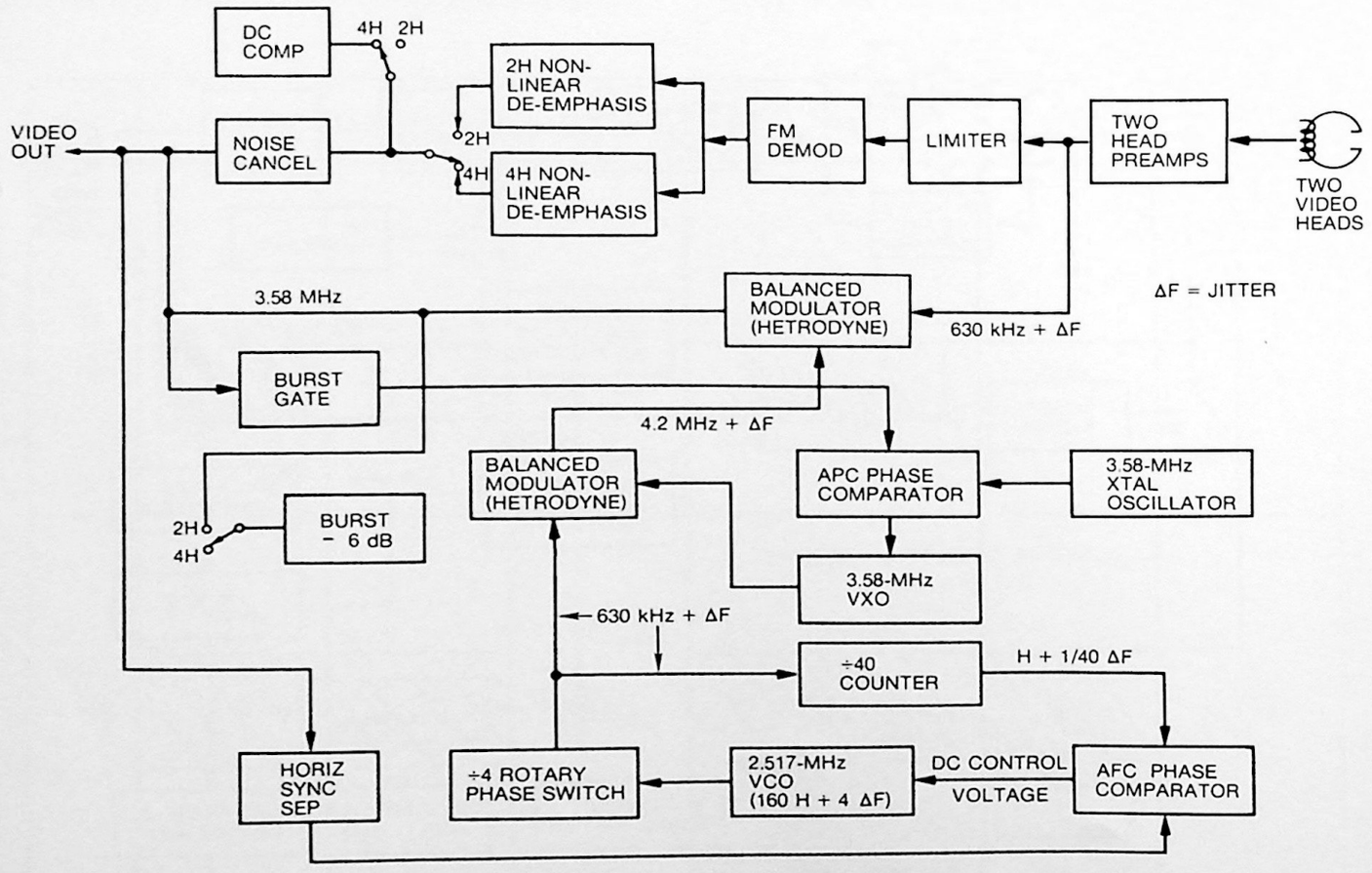

Figure 14. Signal Circuit "Play"

RECORD/PLAY CIRCUIT OPERATION (continued)

A DC compensation stage is switched-in when in the 4-hour operating mode to remove the DC level shifts that were introduced in "Record" to produce the half line offset. This DC compensation is a 30-Hz squarewave which corrects the DC component of the video signal in the shifted fields to agree with the DC level of the video in the nonshifted fields.

The chroma signal consists of 629-kHz RF plus a **jitter-frequency** component. The term "jitter frequency" is easily explained: Ideally, the video-head speed and the tape-transportation speed are held to very tight tolerances, and in practice they are. However, an extremely small change in video-head velocity, which would produce no noticeable change in a black and white picture, can produce chroma phase errors so severe as to make the picture unwatchable. Thus, somehow this effect of minute speed variations which are called the jitter component or ΔF must be removed in order to display proper color. Some thought will reveal if the 629-kHz down-converted chroma signal containing jitter is beat against a 4.2-MHz signal that contains the same jitter component; the difference will be a constant 3.58-MHz signal without the jitter component. This is accomplished by passing the 629-kHz signal into a balanced modulator where it is beat against 4.2-MHz with jitter, thereby producing a constant output of 3.58-MHz chroma. In playback, this 4.2-MHz signal plus jitter is produced by the second balanced modulator.

During playback, the 3.58-MHz VXO is locked to a locally generated constant 3.58-MHz signal derived from a crystal oscillator. The other input to the balanced modulator is 629-kHz plus the jitter factor. The 629-kHz signal is provided by the same 2.517-MHz VCO used in "Record." Recall that the VCO locks to horizontal sync. Because in playback, the horizontal sync pulse contains the small time-base errors caused by minute variations in headwheel speed, the playback horizontal sync pulse can be applied to the AFC phase comparator to produce DC control voltage with jitter modulation. Consequently, this jitter is introduced into the 2.517-MHz signal whose output is divided to 629 kHz. In this way, the 629-kHz output contains the jitter component and thus cancels the jitter in the 629-kHz incoming chroma.

RECORD/PLAY CIRCUIT DETAILS

After studying the text and examining the simplified "Record" and "Play" block diagrams (Figures 13 & 14), the reader should have a basic understanding of the video "Record" and "Play" circuitry used in the VBT200. In the text that follows, additional block diagrams will explain the circuitry in more detail. As will be learned, three distinct modes of operation of the video circuitry are evident. These include the monitor or "E-E" mode as-well-as "Record" and "Play." Each of these operational modes will be explained separately with the aid of block diagrams.

"E-E" Operation

Prior to the start of recording, the VBT200 is in a mode of operation known as "E-E" which couples the input signal from the TV-demodulator package, or an external camera, through some of the "Record/Play" electronics and then to the video-output circuitry where it modulates the RF converter for ultimate transmission to a television receiver. The purpose of "E-E" operation is to allow the user to view the picture he is preparing to record. For example, it allows the user to determine that the camera is properly focused, or that the TV demodulator of the VBT200 is tuned to the proper channel.

As shown in Figure 15, video signal from the TV camera selector switch is routed to the Luminance Circuit board via P32-1. This 1V p-p negative-sync signal is viewable at test point TP 301 which is

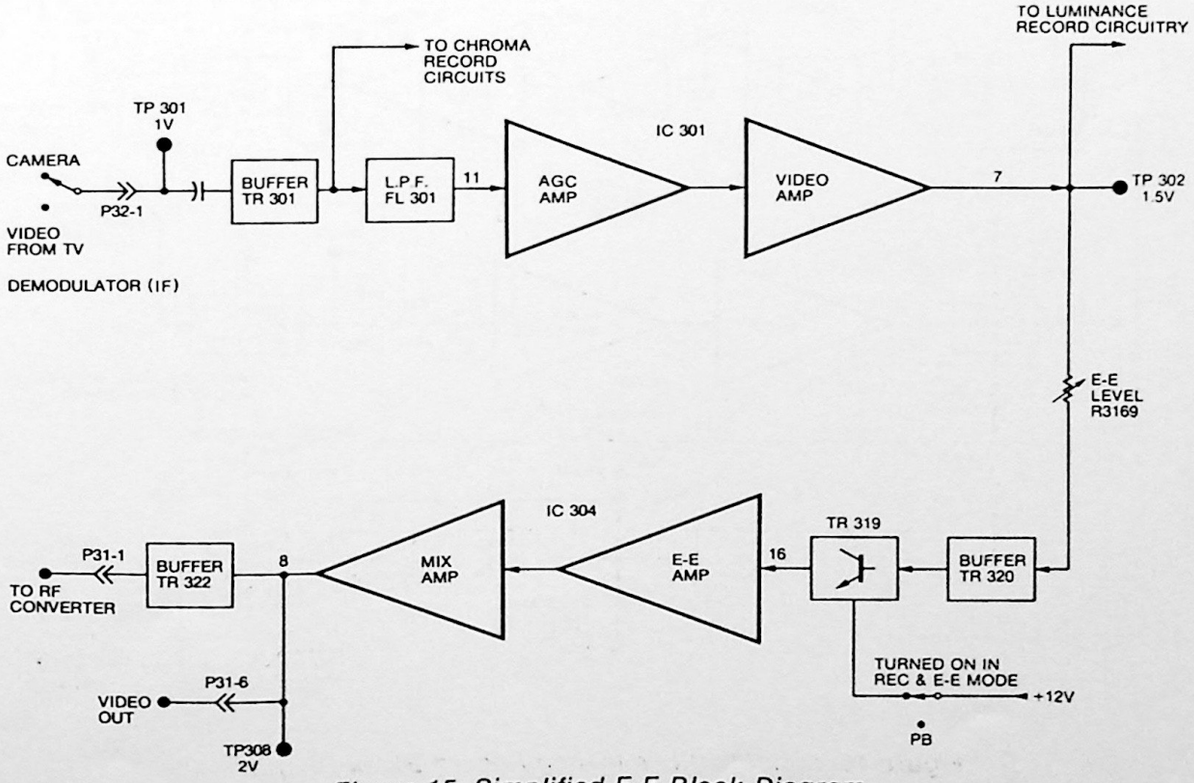

Figure 15. Simplified E-E Block Diagram

RECORD/PLAY CIRCUIT OPERATION (continued)

the input to a buffer amplifier (TR 301) that serves as an isolation and gain stage to prevent the following circuitry from loading the VCR video input.

The buffered video signal is applied to a low-pass filter comprised of packaged LC components designated as FL 301 — filter cut-off frequency is approximately 5.8 MHz. The purpose of the filter is to remove any high-frequency components from the input composite-video signal. Output signal from the filter passes into phase-compensator transformer T301 whose purpose is to correct the phase shifts introduced by the low-pass filter. Phase-compensated video signal is then applied to pin 11 of video-processing chip IC 301.

Blocks within IC 301 indicate that the composite-video signal (including color) are fed to an AGC amplifier whose purpose is to correct any abnormal input level conditions and thus provide a reasonably constant 1-volt video signal to the actual video-record circuitry. AGC regulated video is then coupled to a video amplifier which is part of the same chip. Video-amplifier output emerges from IC 301 at pin 7. This video signal is applied to a video buffer stage consisting of transistor TR 320 via **"E-E" level** control R3169. Buffer output is routed to a second signal-processing IC (IC 304) via electronic-switch transistor TR 319 — transistor is turned "on" during "Record" and "E-E" operation. Switch output (video) is applied to IC 304 through pin 16 of the device.

Video-processing IC 304 is primarily part of the playback circuitry. As shown in the block diagram (Figure 15), composite video (including color) is applied to an "E-E" amplifier stage. Output of this stage is fed into a mixing amplifier whose output emerges from the chip at pin 8. At this point, the video signal is 2V p-p as can be determined at video-output test point TP 308. This output signal is taken off the Luminance board via P31-6 where it is padded down to a 1V p-p signal for the video output jack on the rear of the instrument. Signal from pin 8 is also directed through video-phase-compensator transformer T307. A buffer stage following the phase compensator makes video signal available to the RF converter via plug P31-1.

Luminance Record Circuits

In many respects, the input to the luminance record system closely resembles that of the "E-E" circuitry because the same electronics are used as shown in Figure 16. Briefly, video signal from the input is applied to the previously described buffer and filter circuitry via P32 pin 1 and TP 301. Video signal entering IC 301 pin 11 is applied to the same AGC and video amplifier stages — output is pin 7 of the IC or TP 301. From this point, the signal takes a different path than it did in the "E-E" mode.

Pin 7 video at an amplitude of approximately 1.5V p-p (as viewed at TP 302) passes through a 3.58-MHz trap which removes the chroma signal components. This trap is switched "in" and "out" of the circuitry by the color-killer system. Basically, when the instrument is in the "color" mode, additional low-pass filtering is introduced in the video circuitry to prevent chroma/luminance beats.

Luminance video signal is then routed to switchable 2-hour/4-hour nonlinear video emphasis circuitry contained on the FM Modulator Record and Head Amp board via P37-5. Nonlinear emphasized video is returned to the Luminance board via P37-1 where it is applied back into IC 301 via the **FM-deviation** control (R3161) whose purpose is to regulate the peak-to-peak video level so that the proper signal amplitude is ultimately applied to the FM-modulator circuitry on the FM-Modulator board.

The video signal, once again being processed by IC 301, enters the chip at pin 3 where it encounters additional amplification and pre-emphasis — high frequency boost. Output from the pre-emphasis circuitry leaves the chip at pin 1 and re-enters the chip at pin 15 where it encounters a sync-tip clamper circuit that provides DC restoration of the video signal.

Clamped video (TP 303) is a signal of somewhat over 1V p-p that contains sizable overshoots (spikes). The purpose of pre-emphasizing (overshoots) the signal is to improve the high frequency signal-to-noise performance of the instrument as well as providing enhancement of picture definition. However, it is impor-

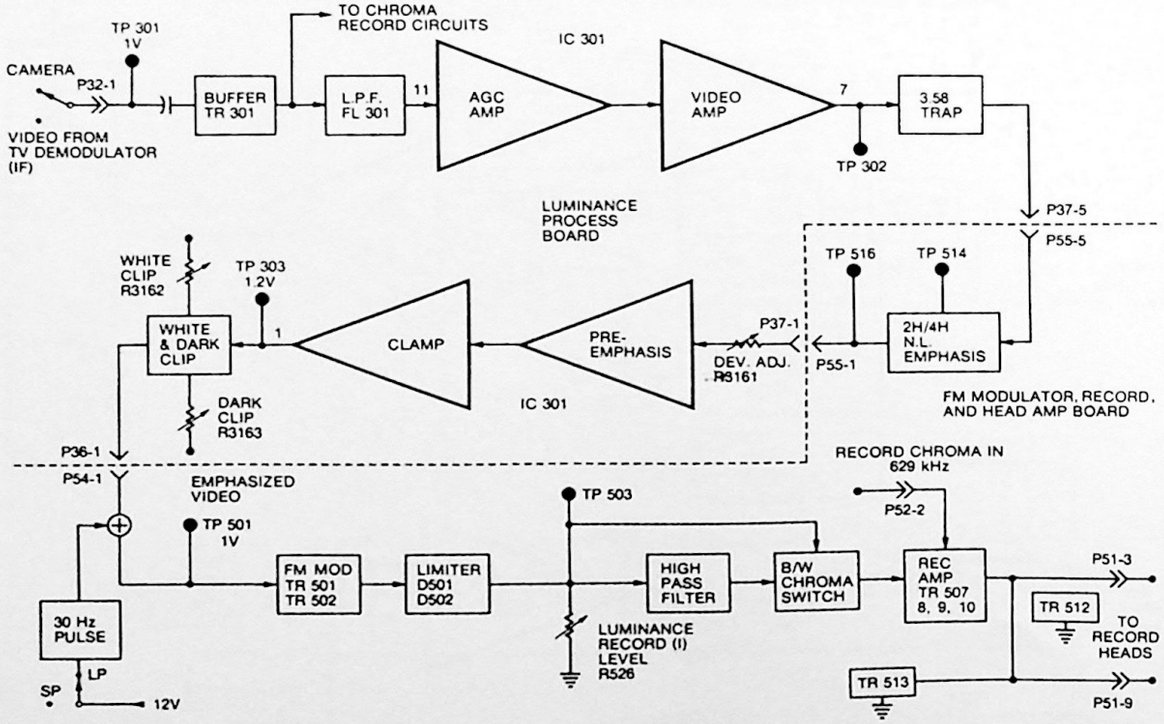

Figure 16. Simplified Luminance Record Block Diagram

RECORD/PLAY CIRCUIT OPERATION (continued)

tant that the overshoots be limited to proper levels to prevent overdeviation of the FM modulator. Consequently, separate white-clip and dark-clip stages (transistors TR 304 and TR 305) are provided. Associated with these two stages are individual controls, R3162 **(white clipper)** and R3163 **(dark clipper)** which are used to set the clipping level and thereby regulate the amount of overshoot. Pre-emphasized and clipped video output is applied to the FM-Modulator Record and Head Amp board via P36-1.

Input to the FM modulator is emphasized clipped video from the Luminance board which enters via P54-1. After passing through an adder stage (shown as circle with + inside) the video signal is applied to the FM-modulator circuit. When the unit is in the 4-hour operating mode, a 30-Hz squarewave signal is added to the video to produce the alternate field level shifting necessary for generating the $^1/_2$-frequency H offset from field-to-field. The FM modulator is simply a multivibrator (flipflop) — transistors TR 501 and 502. When the input voltage corresponds to sync-tip level, the FM modulator runs at 3.4 MHz. When video is applied, and the signal is driven towards white, the multivibrator frequency is driven upwards in response to the video signal. The FM modulator output is transformer coupled to a pair of limiter diodes which remove any amplitude variations from the FM signal. Limiter output can be viewed as an FM signal of approximately .6V p-p at test point TP 503. This signal, after being level regulated by **luminance record level** control R526, is applied to an amplifier stage consisting of TR 503 which drives emitter-follower TR 504.

Output from the emitter follower is routed through a high-pass filter which is selected by "color-mode" switch TR 506 when the unit is operating with a color input signal. When the unit is operating in the black-and-white mode, switch TR 505 routes signal directly to the video-record amplifier. The purpose of the high-pass filter used in color "record" is to prevent FM-modulation components from interacting with the 629-kHz chroma signal and producing beats. Consequently, this filter has a cut-off frequency of approximately 900 kHz. The video-record amplifier (transistors TR 507, 508, 509, and 510) boosts the level of the luminance record signal to provide approximately 12 mA of luminance-video record current at the input to the D-D assembly.

Observe that the 629-kHz down-converted chroma enters the record amplifier via P52-2 where it is mixed with the luminance component. Thus, the output of the record amplifier is luminance FM with about a 3-mA chroma record current mixed. This signal then is routed to the individual video heads which are driven in parallel.

Notice in Figure 16, that "Play/Record" head switching is accomplished electronically. When the unit is in "Record," the record signal is applied to the heads (via individual transformers) through P51-3 and -9. The ground ends of the video heads are returned to the circuit board via P51-1 and -10. Notice that the heads are grounded through switching transistors TR 514 and TR 515 which are "on" when the unit is in "Record." Notice too, that these switches also ground the input of the playback preamplifiers and peaking capacitors C530 and C545 to prevent them from interacting with the record current. Also evident is the fact that playback switches TR 512 and TR 513 are "off" when the unit is operating in the "Record" mode.

Chroma Record Circuits

The chroma "record" circuits are largely separate from the luminance processing as can be seen in Figure 17. Video signal again enters the Luminance board via P31-1 where it can be observed as a 1-volt signal at TP 301. This signal passes through isolating buffer TR 301 and is routed to the luminance and chrominance processing circuitry as shown. Notice in the block diagram that the video signal output of buffer TR 301 is applied to 3.58-MHz bandpass filter T308 which separates the chroma component from the luminance signal. The chroma signal then is applied to a stage designated as a "burst amplifier" which also serves as a chroma amplifier. The designation burst amplifier results from the fact that when the unit is operating in the 2-hour "Record mode," the burst receives an additional 6 dB of amplification to accomplish the desired 6-dB burst enhancement function which is part of the VHS standard. In the 4-hour mode of operation, the additional burst boost is not used, and transistor TR 324 merely serves as a chroma amplifier stage. Output from the burst amplifier is viewable at test point TP 309. This signal is then

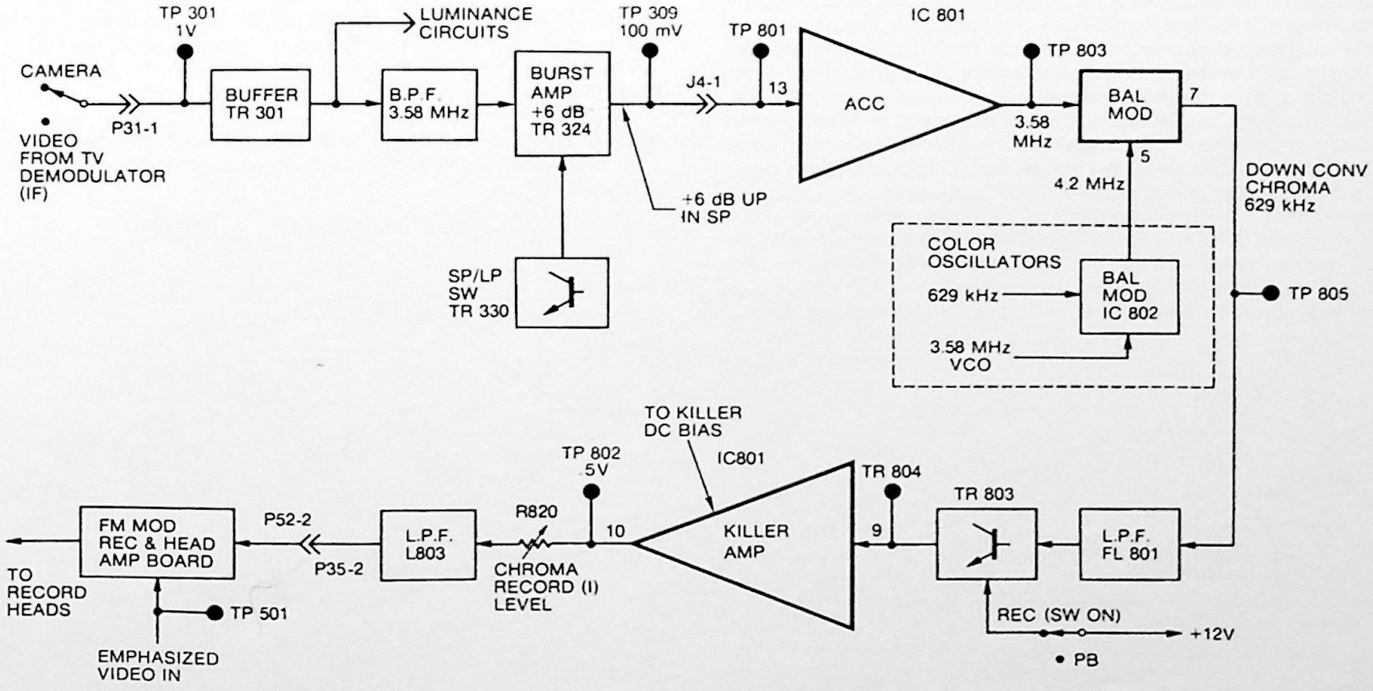

Figure 17. Simplified Chroma Record Block Diagram

RECORD/PLAY CIRCUIT OPERATION (continued)

routed to the Chroma board via interconnecting jumper wires that are contained in the package designated J4.

Once the signal is on the Chroma board, it enters chroma processing IC 801 at pin 13 — signal is viewable at TP 801. Once inside the IC, the chroma signal passes through ACC (Automatic Chroma Control) circuitry which removes any level variations, in the same way as ACC circuitry does in a color television receiver. ACC-regulated chroma is applied to a balanced modulator which is part of the same IC. The balanced modulator input is pin 3 of the IC and the signal is viewable at test point TP 803. Also entering the balanced modulator via pin 5 is a 4.2-MHz CW signal generated by beating 3.58-MHz VXO output CW with 629-kHz rotary phase CW in a second balanced modulator. The 629-kHz down-converted chroma signal (viewable at test point TP 805) emerges from the chip at pin 7.

A low-pass filter (C818 and FL 801) rejects everything except the 629-kHz chroma signal. Output from this filter (selectable by an electronic switch consisting of TR 803 which is "on" during "Record") is routed back to IC 801 via pin 9 — viewable at TP 804. Signal entering the chip passes through a killer-amplifier stage which is turned "on" and "off" by the color-killer circuit. When the unit is recording a color program, the killer-amplifier stage is active and passes signal via pin 10. This down-converted 629-kHz signal output is viewable at TP 802. After passing through the **chroma-record level** control (R820) and a low-pass filter (L803 and C807), the down-converted 629-kHz chroma is routed back to the Luminance board so it can be transferred to the FM-Modulator Record and Head Amp board via plug P35-2. Once on the FM-Modulator board, the chroma signal is mixed with luminance in the record-amplifier stages as previously described.

Luminance Playback Circuits

When video is recorded, one first thinks that the only frequencies recorded on the tape are those between 3.4 and 4.4 MHz which represent the black level and white level of the video signal respectively. In reality, as with any FM signal, sidebands are produced which consist of the sum and the difference between the incoming video signal frequencies and the instantaneous modulator frequency which corresponds to the scene brightness. Thus, a spectrum of signal is recorded on the tape that occupies approximately a 6-MHz bandwidth. As shown in Figure 18, the luminance frequency spectrum extends from approximately 900 kHz to a maximum of 6.9 MHz. This is easily calculated if the technician thinks of a condition where the instantaneous video frequency is 2.5 MHz and a black-to-white transition is made. Under these conditions, there will be signal components (sum of 4.4 MHz and 2.5 MHz) which extend out to 6.9 MHz. Obviously, lower sidebands of this same signal are produced that range down towards approximately 1.9 MHz. Similar calculations using a white-to-black transition and a maximum-frequency video signal would indicate that the lower limits of the spectrum are approximately 900 kHz. The sharp cut-off shown in the illustration at 900 kHz is due to the high-pass filter which is switched into the circuit during "Record" to prevent the luminance sideband components from interfering with the down-converted chroma signal. Thus, a filter minimizes beats between the luminance and chrominance signals. The color signal, which was mixed with the luminance signal in "Record," is a band of frequencies 1 MHz wide ranging from 129 kHz to 1.129 MHz, with the burst frequency being centered at 629 kHz. Thus, this is the composition of the signal as was recorded on the VHS format magnetic tape.

In playback, the video heads must recover the information impressed upon the tape and present it to the luminance and chroma systems to replicate the original video signal. Due to various electrical and physical phenomenon, it is necessary to shape the response of the "record" amplifier, and to compensate for the response of the "record" amplifier **and** the inherent limitations of the video tape when the signal is played back. Thus, preamplifiers with special response characteristics are used to restore proper frequency relationship to all of the sideband components when the signal is played back. Furthermore, due to slight manufacturing tolerances between the video heads, not only is it necessary to compensate for the overall video signal, but it is also necessary to match, or equalize, the individual heads so that the field-to-field variation of video signal (RF head signal) is minimal. Referring to Figure 19, casual observation shows that the two video heads drive individual integrated-circuit preamplifiers consisting of IC 501 and IC 502. During playback, one side of each head is grounded through electronic switches consisting of transistors TR 512 and TR 513 which are turned "on." The head signals are applied to terminal 2 of IC 501 and IC 502 respectively.

Associated with the input to these IC's are two trimmer capacitors known as "**peak-A**" (C530) and "**peak-B**" (C545) that set the resonance of the video heads for a peak response at 4.5 MHz. This response peak, and the frequency-response adjustments of the individual preamplifiers, create playback preamplifier frequency characteristics that properly restore the sideband levels to their proper frequency relationships.

Associated with each of the integrated circuit preamplifiers is a feedback frequency-response control network consisting of RC components and adjustable resistors R553 **("Q"-A)** and R565 **("Q"-B)** which are adjusted for proper playback frequency response characteristics. The outputs of both preamplifiers are fed to additional individual stages of amplification consisting of TR 501 and TR 518 and then to a summing point consisting of **mix control** R575.

As previously learned, it is desirable in video playback to turn "on" only the amplifier that is in contact with the video tape in

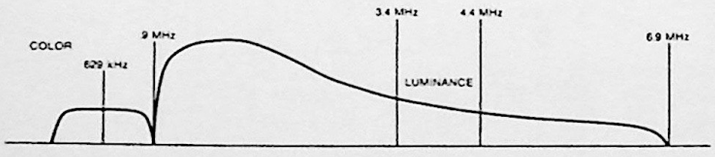

Figure 18. Record Frequency Response

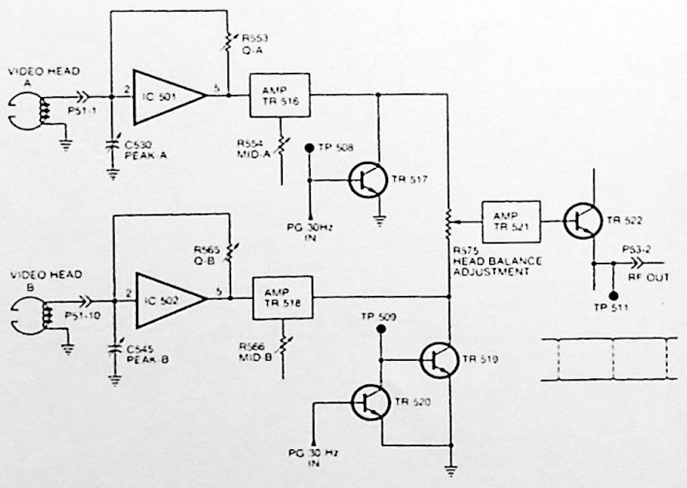

Figure 19. Head Amp Block Diagram

RECORD/PLAY CIRCUIT OPERATION (continued)

order to prevent the inactive video head from contributing noise to the input signal — the signal levels at the video heads are incredibly small and any stray noise, after amplification, will degrade performance. Consequently, switch transistors TR 517 and TR 519 are gated "on" and "off" to allow video signal to pass whenever the appropriate head is on the tape. The "summed" output of the heads receives additional amplification by transistors TR 521 and emitter-follower stage TR 522. The summed RF head signal (luminance FM and chroma) is routed off the FM Modulator Record and Head Amp board to the luminance and chrominance circuitry via P53-2. This signal is available for observation at TP 511. As shown in Figure 20, the RF head signal is applied the Luminance Processor board at P34-2 for input to the luminance and chroma processing circuitry.

After the RF signal passes through phase compensation filter FL 303, it is applied to the input of an amplifier contained in IC 302 — input signal viewable at TP 304. Output from the amplifier follows one of two paths: In the "color" mode, the signal is passed out of pin 3 of the IC through high-pass filter FL 302 and back into the chip via pin 5. The purpose of this filter is to reject the 629-kHz down-converted chroma. In black and white mode, an electronic switch in the chip routes the signal directly to the mixing amplifier, rather than passing it through the filter.

The mixing amplifier, in conjunction with some level detection circuitry and a 1-H (63.5 μs) delay line comprise what is known as the "dropout compensator." The dropout compensator is a desirable feature in a video tape recorder because its action masks the effect of defects in the tape which otherwise would cause flashes and streaks in the picture. Basically, the circuit operation of the dropout compensator is simple. When conditions are normal, RF-signal (luminance video before demodulation) is fed directly through into the limiter and demodulator circuitry which follows the output of IC 302. At the same time, RF-signal is applied to the 1-H delay line from the output of the mixing amplifier. Thus, at the output of the 1-H delay line (pin 7 of IC 302), RF-signal that comprises the previous line's video information is always available. In the event that an imperfection in the tape causes loss of RF-signal input to IC 302, the dropout detector circuit senses the drop in RF-signal level (approximately minus 20 dB) so that anytime the instantaneous RF signal drops 20-dB below normal, an electronic switch in the chip closes and substitutes the "1-H delayed" signal for the attenuated input RF signal. Thus, the white or black flash that would result from the dropout is replaced by video information from the previous line and so the effect of the dropout is largely hidden. Consequently, the usable life of the recording tape is extended because the most noticeable effect of wear on the video tape is an increasing number of dropouts. It is interesting to note the signal being recirculated in the 1-H delay line can replace three to four lines of video before the effect becomes extremely noticeable in the playback picture.

RF output from IC 302 is applied to low-pass filter FL 304 to remove any second harmonic content in the RF signal. Filter output drives buffer transistor TR 310 whose output is applied to pin 14 of IC 303 — input signal is viewable at test point TP 305. Contained in this IC is a series of limiter (clipper) stages that remove all traces of amplitude variation in the luminance FM signal. Limiter output then drives an FM demodulator which is a part of this chip.

Demodulated video output from IC 303 passes through filter FL 306 which has a cut-off frequency of 4.1 MHz. Thus, this filter rejects all ripple and harmonic components from the demodulated video signal. Low-pass filter output passes through a de-emphasis network (C363 and R375) into an amplifier consisting of TR 314 and the buffer stage TR 315.

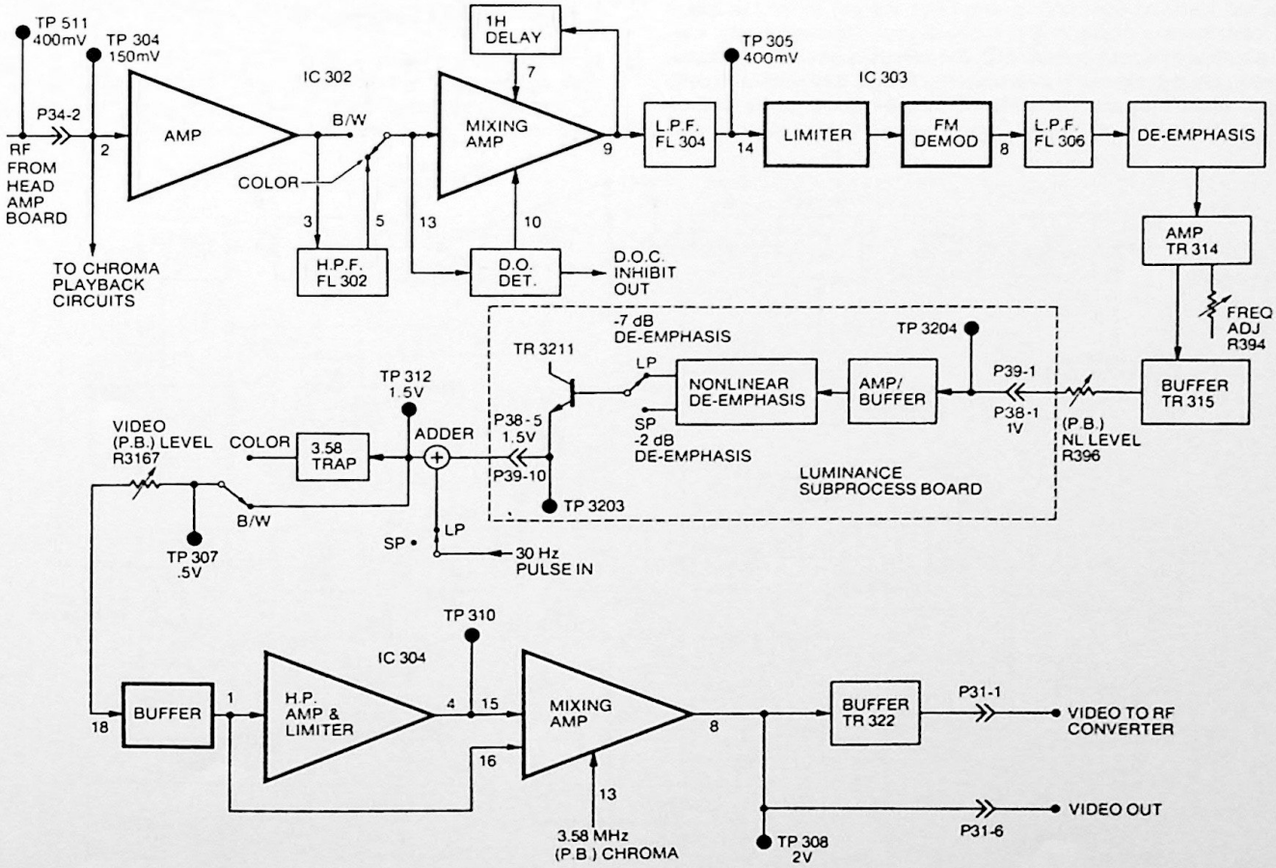

Figure 20. Simplified Luminance Playback Block Diagram

RECORD/PLAY CIRCUIT OPERATION (continued)

Output from the buffer stage is video containing the original 2-hour/4-hour emphasis which was placed on the signal during "Record." From here, the video signal is applied to a Luminance Subprocessing board (via P38-1) which is located on the bottom of the tape deck. On the Luminance Subprocessing board, de-emphasis circuitry (selectable by the 2-hour/4-hour logic) provides additional selectable rolloff of high frequencies, and by so doing restores proper frequency response to the video signal. The output is sent back to the Luminance board via plug P38-5 where it is applied to a trap after passing through an adder stage which introduces a 30-Hz pulse to cancel the DC level shifts in the picture that were produced by the FM interleave circuit during 4-hour "Record." The output of the adder, which is now video information, is viewable at test point TP 312. Following the adder stage, black and white or color mode video is either directly routed to a buffer stage located in IC 304 (via pin 18) in the case of black and white, or the signal is applied a 3.58-MHz chroma trap consisting of FL 307 and associated components. As previously discussed, electronic switching determines whether the path is direct or through the filter. In either case, the video signal input to the buffer amplifier on IC 304 is viewable at test point TP 307. Also, notice in the illustration, that **video level** control R3167 is used to set the input to the IC 304 buffer stage.

Also included in IC 304 is noise-inverter circuitry similar to that used in conventional television instruments. A sample of the video signal is taken from the buffer, sent through a high-pass amplifier (an amplifier with peaked high frequency response) which amplifies the noise component of the video. Output of the high-pass amplifier is fed into a limiter stage in the chip which removes all low frequency components from the video signal, leaving only noise. Limiter output emerges from the chip via pin 4 into additional limiting circuitry consisting of a pair of clipper diodes that set the maximum amplitude of the noise signal. Output signal from limiter diodes D305 and D306 is inverted noise which is fed back to the mixing amplifier via pin 15 of the chip where it cancels the noise in the video signal. Consequently, the output from the mixing amplifier (IC 304 pin 8) is relatively noise-free video — 2V p-p signal is viewable at TP 308. It is also interesting to note that the mixing amplifier in IC 304 is the point where the chroma signal from the chroma processing circuitry is reintroduced to the video. Chroma signal coming from the chroma circuits is input to the mixing amplifier at pin 13 of IC 304.

The luminance output signal, which is now combined with the chroma signal, form composite color video at an amplitude of 2V p-p and is routed to the video-output jack on the rear of the instrument via P31 pin 6. The same signal after some additional phase compensation in transformer T307 is applied to a buffer stage consisting of transistor TR 322 whose 2V p-p output is fed to the RF converter through P31 pin 1.

Chroma Playback Circuits

As can be seen in Figure 21, RF signal (head-amplifier output) is applied to the Luminance board via P34-2. At this point, the RF signal is directed to the luminance and chroma circuits. Following the chroma signal path, the RF signal drives amplifier transistor TR 327 whose output is applied to the ACC amplifier on the Chroma board (via low-pass filter FL 308 and electronic switch transistor TR 326) — signal observable at TP 309.

Once the signal is on the Chroma board, it is viewable at test point TP 801 as the ACC-amplifier input signal to IC 801 pin 13. The ACC amplifier system of IC 801 acts to minimize level changes in the chroma signal that might be attributed to differing tape characteristics and/or physical defects in the tape. Output from the ACC amplifier (TP 803) is applied to a balanced modulator which is part of the same chip via pin 3. Also entering the balanced modulator via pin 5 is 4.2-MHz CW signal. In playback, the balanced-modulator output is the difference between the 629-kHz down-converted chroma and the 4.2-MHz CW signal which is 3.58-MHz up-converted chroma. Balanced-modulator output is via IC 801 pin 7 — signal is viewable at TP 805. In playback, the 3.58-MHz regenerated chroma signal drives buffer transistor TR 802 whose output can be observed at TP 815.

Up-converted chroma is then applied to TR 807, a 2-hour/4-hour switchable 6-dB burst-attenuation stage. In the 2-hour mode, burst is attenuated by 6 dB because it was originally boosted by 6

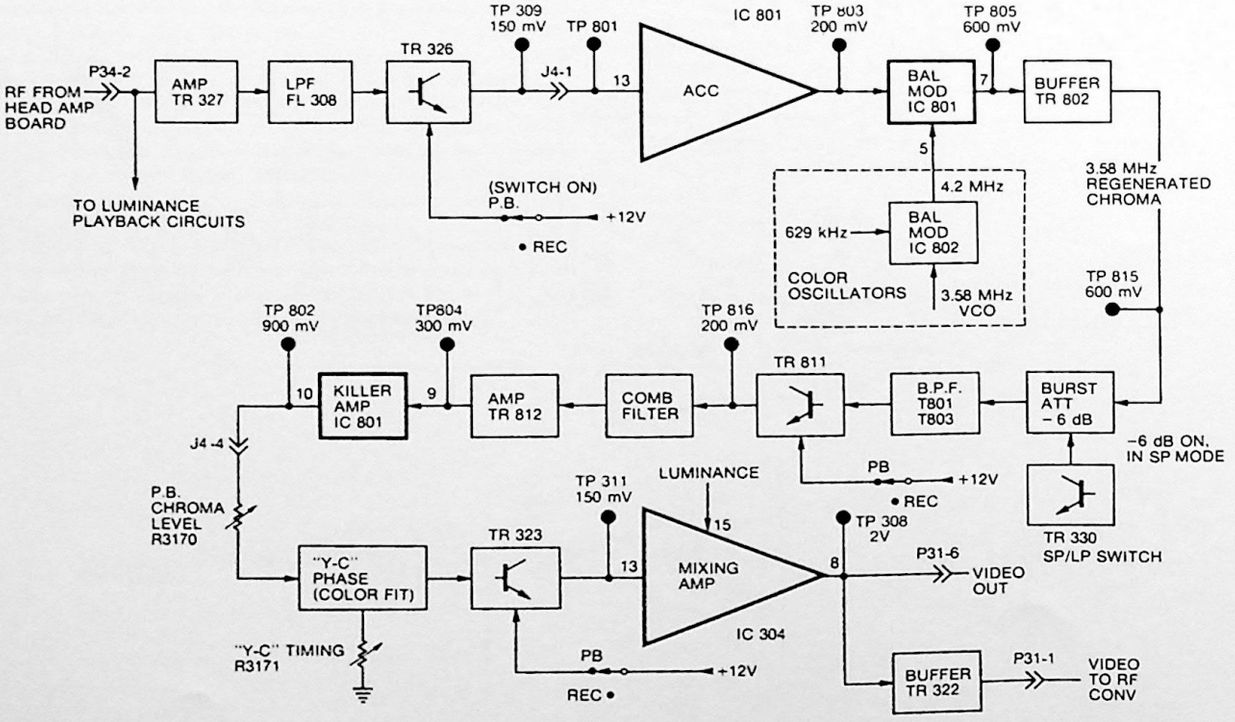

Figure 21. Simplified Chroma Playback Block Diagram

RECORD/PLAY CIRCUIT OPERATION (continued)

dB during "Record." In the 4-hour mode, this stage merely serves as a chroma amplifier. After passing through a 3.58-MHz bandpass filter (T801 through T803), filtered chroma (TR 807 signal) drives a playback comb-filter circuit via electronic switch transistor TR 811 which is turned "on" during playback — switch output is viewable at test point TP 816.

The comb filter is a rather sophisticated circuit that utilizes a "1-H delay line" in conjunction with the chroma rotary-phase recording technique to minimize chroma crosstalk in the color video signal. Conceptually, the chroma rotary-phase system is designed to assure that the chroma crosstalk component is always out of phase with the desired signal. Because of the line-to-line redundancy of the color information in the picture, it is possible, by use of a 1-H delay line, to add the chroma signal from the chroma processing circuit along with chroma from the previous line (1-H delayed) to obtain twice the amplitude of chroma and cancel the crosstalk. Obviously, this is a highly simplified explanation of the chroma rotary-phase and the comb-filter circuits. Nevertheless, for most servicing purposes, this explanation of circuit operation should be adequate.

Chroma from the comb filter drives amplifier transistor TR 812 whose output signal (TP 804) is applied to IC 801 pin 9 where it passes through a killer-amplifier stage that enables or defeats the chroma circuits in the presence or absence of color signal. Output from the killer-amplifier emerges from the chip at pin 10 and is directed to the Luminance board via jumper J4 — signal viewable at test point TP 802. Once the chroma signal is back on the Luminance board, it passes through the **playback level** control (R3170) which allows adjustment of the playback chroma amplitude.

Chroma signal is then directed to the "Y-C" phasing circuit. Basically, the "Y-C" phasing circuit consists of phase-shift components in conjunction with **"Y-C" timing** control R3171. The purpose of this circuitry is to allow adjustment of luminance/chrominance timing — color fit. Network output passes through a playback electronic switch (transistor TR 323) whose output is matrixed with the luminance signal in the mixing amplifier of IC 304. Chroma input signal can be observed at TP 311. Once the chroma signal is mixed with luminance, it follows the previously described path to the RF modulator or to the external video-output jack.

COLOR OSCILLATORS

As shown in Figure 22, the VBT200 uses three separate oscillators to process the chrominance signal. These are the 3.58-MHz XTAL oscillator, (crystal oscillator), 3.58-MHz VXO (variable crystal oscillator), and the 2.517-MHz VCO (voltage-controlled oscillator). The functions of each will be described in the following text. As previously learned, the 3.58-MHz chroma information is down-converted (hetrodyned) to 629 kHz in the "Record" mode by beating the signal against a 4.2-MHz CW signal in a balanced modulator (mixer) circuit.

Not only is the "Record" chroma signal down-converted to 629 kHz, but it is also recorded in a configuration where on the first field (Head-1 pass) the phase of the chroma signal is advanced 90° per line. When the second field is recorded (Head-2 pass) the chroma signal is retarded in phase by 90° for each horizontal line. This system of chroma signal recording is called "chroma rotary-phase" recording. As was learned, this system of chroma recording allows a comb-filter circuit in the playback electronics to effectively cancel chroma crosstalk signal which is present in "LP" recordings because there is a negative guard band in the LP mode.

In order to accomplish the chroma rotary-phase recording technique, the 4.2-MHz signal used to down-convert the chroma information must change phase by 90° each horizontal line. Thus, this signal must somehow be keyed by the horizontal sync pulse. It

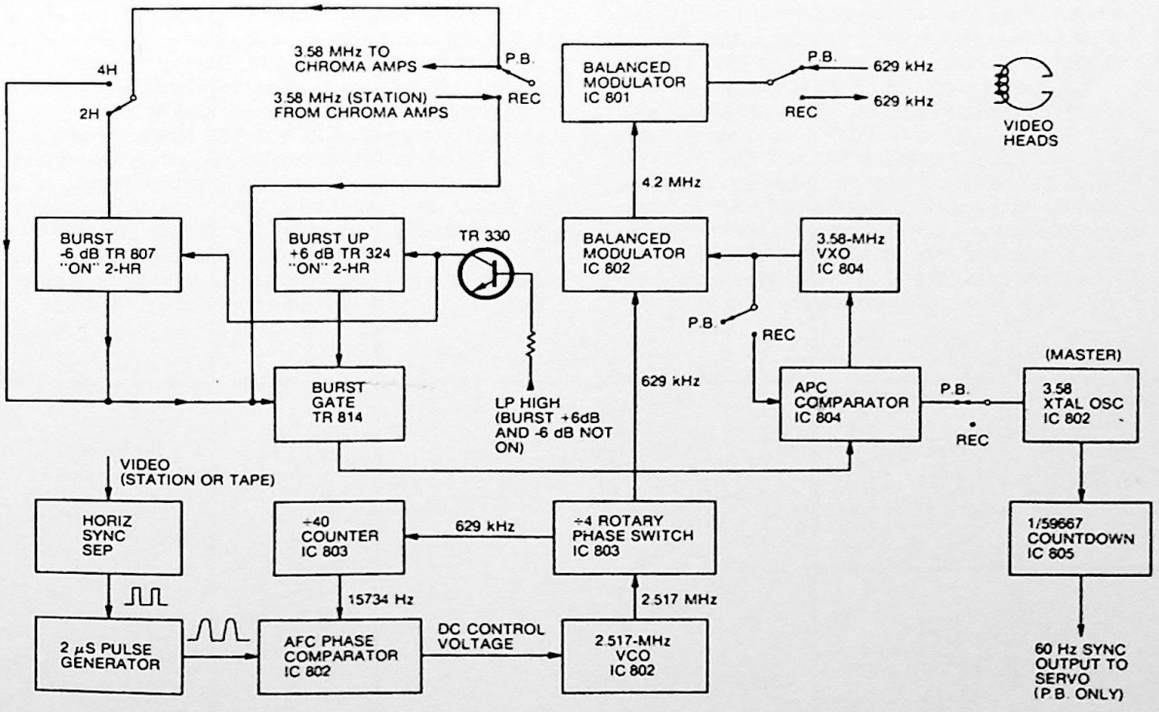

Figure 22. Simplified Color Oscillators Block Diagram

RECORD/PLAY CIRCUIT OPERATION (continued)

has been learned that the 4.2-MHz CW signal is actually produced by beating together a 3.58-MHz signal obtained from the variable crystal oscillator (VXO) and a phase-rotary 629-kHz signal. These signals are hetrodyned in a second balanced modulator (mixer) and the sum of the two frequencies is the 4.2-MHz CW signal used to **down-convert** the chroma to 629 kHz. During "Record," the 3.58-MHz VXO is locked to the input signal burst by an APC (Automatic Phase Control) system similar to that used in color television receivers. The 629-kHz rotary-phase CW signal is extracted from a ÷4 counter clocked by a 2.517-MHz signal produced by the voltage-controlled oscillator (VCO) which is phased locked to the "Record" signal horizontal sync pulse.

In Playback, the 629-kHz down-converted chroma signal is **up-converted** back to the 3.58-MHz frequency by using the same oscillators and balanced modulators in reverse. The incoming 629-kHz signal is applied to the balanced modulator where it is beat against 4.2-MHz phase-rotary CW signal. The difference frequency (3.58 MHz) is the regenerated chroma signal. During Playback, the 3.58 VXO (beats against 629-kHz phase-rotary CW to produce 4.2 MHz for up-conversion) is referenced to the 3.58-MHz XTAL (crystal oscillator).

The APC circuit associated with the 3.58-MHz VXO receives output from the 3.58-MHz XTAL oscillator as a reference and the burst component of the up-converted 3.58-MHz color signal is compared against this locally generated 3.58-MHz reference signal to generate an error voltage that is used to correct 3.58-MHz VXO phase and frequency so that the output 3.58-MHz chroma signal has a high degree of phase stability. Also during Playback, the **2.517-MHz VCO** is locked to playback horizontal sync. By so doing, any **jitter** component present in the playback signal which could adversely affect chroma phase (color hue) can be cancelled by introducing this jitter component **"out of phase"** into the 629-kHz rotary-phase chroma. At the same time, the horizontal sync pulse triggers the gated counter circuit to produce the appropriate phase of chroma signal necessary to properly up-convert the chroma signal.

Examination of the **Color Oscillators** block diagram at the end of this section shows that four integrated circuits (IC 801, 2, 3, 4) provide most of the circuitry required for up-conversion and down-conversion of the chroma signal during Playback and Record respectively. Contained in IC 802 is the 3.58-MHz XTAL (crystal) oscillator whose output is observable at TP 807. During "Record," this oscillator is inactive — switched "off." The other oscillator contained in IC 802 is the 2.517-MHz VCO and its associated phase-comparator circuit. Output from the VCO (IC 802 pin 17) is fed to pin 6 of IC 803, the gated counter circuit which produces the rotary-phase 629-kHz CW signal. One of the 629-kHz signals is applied to a ÷40 counter in the chip to produce a horizontal frequency signal which leaves the chip at pin 2 to provide an "FH" (horizontal frequency) feedback signal to the phase-comparator circuitry located in IC 802. This signal enters the chip at pin 18.

The other input to the AFC phase comparator is the 2-μs pulse which is timed by horizontal sync. This signal is produced by circuitry in IC 803 and emerges from the chip at pin 14. The 2-μs pulse (TP 811 signal) is sent to the phase-comparator circuitry in IC 802 and enters the chip at pin 7. Thus, this feedback loop locks the 2.517-MHz VCO to a multiple of 160 times the horizontal scan frequency — 2.517440 MHz.

This signal, as previously mentioned, is supplied to pin 6 of IC 803 where it is counted down to a nominal 629 kHz (629.360 kHz) in the chip. Then, appropriate gating circuitry selects the proper output from the counter to provide a signal that represents phase zero with respect to the chroma signal phase +90°, +180°, +270°, etc. or a phase 0°, −90°, −180°, −270°, etc., depending upon which head is on the tape at the particular time.

The direction of phase rotation, being related to which head is on the tape at a given time, can be determined and preset by sensing whether the PG pulse is positive-going or negative-going. As shown in the block diagram, the cylinder PG (pulse generator) pulse from J1 pin 1 is applied to pin 7 of IC 803 where it serves to select the direction of rotation for the four-bit counter. The outputs of the four gates which select the appropriate counter signal phase are summed together into a single 629-kHz rotary-phase signal which emerges from the chip at pin 4. This output signal is sent back to the balanced modulator stage in IC 802 where it beats with 3.58-MHz CW from the 3.58-MHz VXO (Variable Crystal Oscillator) contained in IC 804. Output from the balanced modulator in IC 802 emerges at pin 12 as a nominal 4.2-MHz signal — 4.208905 MHz exact frequency. This signal is fed to the balanced modulator contained in IC 801 where the actual conversion of chroma information is performed. The VXO contained in IC 804 is locked to the input chroma-signal burst during "Record" by comparing its output to burst in an APC circuit. 3.58-MHz burst signal enters IC 804 at pin 3.

Transistor switches consisting of TR 815 and TR 816 make the selection of which signals are compared to lock the oscillator during Record and Playback. During "Record," 3.58-MHz VXO output emerges from the chip at pin 14 and is applied back to the APC circuit via transistor switch TR 815. The other signal applied to the APC system is burst which is applied via burst-gate transistor TR 814 and some limiter circuitry into chip terminal 6. This burst signal is observable at TP 813. During Playback, switch TR 816 is turned "on" to supply reference signal from the 3.58 XTAL oscillator located in integrated circuit IC 802. This signal (from TR 816) is applied into pin 3 of IC 804. The other signal (up-converted playback signal burst) enters the phase comparator via IC 804 pin 6. Thus in Playback, the regenerated chroma signal is phase-locked to the locally generated 3.58-MHz signal provided by the 3.58-MHz crystal oscillator contained in IC 802. The crystal oscillator in IC 802 also drives a frequency counter (IC 805) which counts the 3.58-MHz signal down to 60 Hz to provide a reference signal to lock the cylinder servo system during Playback.

CYLINDER AND CAPSTAN SERVO OPERATION

The servo systems used in the VBT200 are used to control the operation of the video-head cylinder and capstan-drive motors by sensing an error in operation and issuing a control signal that corrects the operation. Two servo systems are used in the VCR. They are the capstan servo system and the cylinder (headwheel) servo system. These servos have two modes of operation — "Play" and "Record."

In the "Record" mode, television vertical sync is the reference for the cylinder servo. The feedback signal is a pulse signal taken from the cylinder P.G. (pulse generator) which provides an accurate indication of where the video heads are on the tape at all times, and which head is in contact with the tape. During "Play," it is only necessary that the headwheel rotate at a constant 1800 RPM. Consequently, a 60-Hz reference signal is supplied by a counter circuit that operates from an internal 3.58-MHz crystal oscillator.

The capstan servo system which controls the actual movement of tape through the machine also has two modes of operation. During "Record," the capstan servo system simply functions to transport the tape through the machine at a constant speed. The reference signal for the capstan servo system is the previously described trapezoid waveform derived from the cylinder P.G. pulse. Thus, the capstan servo system locks to the headwheel rotation. The sample pulse (indication of capstan motor operation) is a signal derived from the capstan F.G. (frequency generator) which is divided down to 30 Hz in **Standard Play** (SP) mode or 15 Hz in **Long Play** (LP) mode. Comparison of this signal with the trapezoid reference indicates variations in motor speed. Therefore, the feedback control system can lock the capstan motor to a constant speed.

During playback, the reference signal remains the same (trapezoid derived from cylinder P.G.); however, the feedback signal now becomes the control-track signal which is recorded along the bottom edge of the tape. When the tape is recorded, the control-track signal is produced by a 30-Hz frequency counter (flip-flop) which is locked to television vertical sync. Thus, the capstan servo system can sense any deviation in machine speed by timing the arrival of control-track pulses. Furthermore, because during "Record," the position of vertical sync on the tape is accurately determined, and because the control pulse is coincident with vertical sync on the tape, it is possible to provide a vernier control of tape transportation speed so that the capstan servo system can accurately move the tape in such a manner that the recorded video tracks on the tape align themselves perfectly with the path of the rotating video head assembly.

Cylinder Servo System

The cylinder servo system shown in Figure 24 has two basic feedback control loops. The first loop (shown at the bottom of the **Cylinder Servo** block diagram) is the speed control loop which maintains the headwheel rotation at very nearly the nominal 1800 RPM. Headwheel speed is sensed by sampling output from the D-D motor F.G. assembly. This is a 1.8-kHz sinewave signal which is applied to a frequency amplifier whose output is shaped into a 900-Hz squarewave by a ÷ 2 counter.

The squarewave signal is applied to a logic "AND gate" along with the output of a standard-time generator. The standard-time generator is a one-shot multivibrator whose pulse width is preset by the **cylinder free-running speed** control. This constant width pulse is compared with the pulse produced by the cylinder F.G. in an "AND" gate. The output of the gate is the difference between

	MODE	REFERENCE SIGNAL	SAMPLE SIGNAL
(CYLINDER)	REC	V-SYNC	CYLINDER P.G.
	PLAY	REFERENCE SIGNAL MADE FROM 3.58 MHz (60 Hz)	
TAPE SPEED CONTROL (CAPSTAN)	REC	CYLINDER P.G.	CAPSTAN F.G. DIVIDER OUTPUT (SP: 30 Hz LP: 15 Hz)
	PLAY		RECORDED CONTROL SIGNAL

Figure 23. Servo Systems Reference and Sample Signals

CYLINDER AND CAPSTAN SERVO OPERATION (continued)

these two pulses. Assuming that the motor tends to run fast, the width of the gate input pulse (motor-speed sample) becomes narrower; thus, the output pulse which represents the difference between the sample pulse and the standard-time generator pulse also becomes narrower. The gate output pulse is integrated (filtered) to provide a DC signal to a motor drive circuit. In the event that the motor slows down, the pulse width becomes wider, more motor drive is produced, and the motor speeds up. In this way, the motor speed is maintained very close to 1800 RPM.

The top section of the block diagram shows the phasing (position) control part of the servo system. During "Record," video signal is applied to a sync separator which separates out the 60-Hz vertical sync pulse. Vertical sync is applied to an amplifier and through a ÷ 2 counter to produce a 30-Hz squarewave signal. This signal follows two paths. One path is an additional amplifier that generates the 30-Hz squarewave control-track signal which is recorded along the bottom edge of the tape. The other path is through a time delay (one-shot multivibrator) circuit which allows the video heads to be phased with respect to vertical sync. The output of this stage, known as the "record shifter," is a narrow sample pulse which is applied to a sample and hold circuit as the reference signal.

The feedback signal (represents speed and position of the headwheel) is taken from the cylinder motor pulse generator coils (P.G.). This 30-Hz signal tells two things — which head is on the tape and where the head is on the tape at any particular instant. After passing through a pulse-amplifier circuit and a "one-shot" delay, the signal drives a trapezoid generator. (The trapezoid signal is a waveform that has a definite leading edge rise time and a definite trailing edge fall time.) This signal is also applied to the sample and hold circuit. When the headwheel motor speed and phasing are exactly right, the trailing edge of the trapezoid is sampled at its midpoint. Each time a sample is taken, it is held as a DC voltage in the sample and hold circuit. Output of the sample and hold circuit is fed to the standard-time generator and it determines the pulse width of the pulse applied to the "AND" gate. Thus, by varying the width of this pulse, it is possible to provide a small increment of speed control necessary to accurately position the heads on the tape.

Assume for a moment that the headwheel is running slightly slow. In this instance, the sample will be taken at a higher point on the trapezoid resulting in more DC voltage output from the sample and hold circuit. This is translated into a change in conduction time of the standard-time generator such that the comparison process in the gate provides a signal to speed up the motor. The converse is true if the headwheel is running slightly fast. In this instance, the sample is taken lower on the ramp and the motor is ordered to slow down.

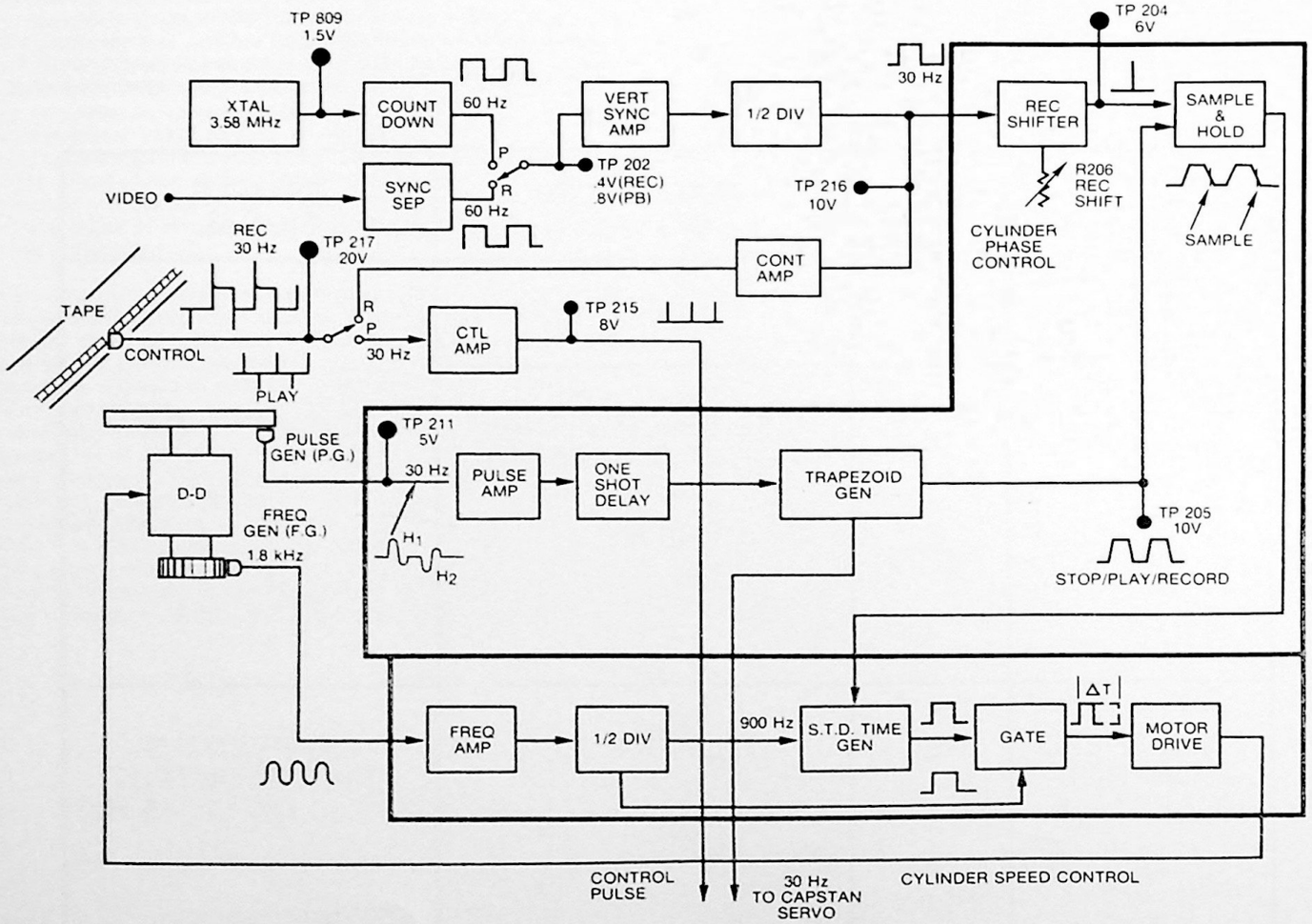

Figure 24. Cylinder Servo System

CYLINDER AND CAPSTAN SERVO OPERATION (continued)

Capstan Servo System

The capstan servo circuitry is similar to that used for the cylinder servo. Again, two loops are used — a speed control loop and a position or phasing control loop. Capstan motor speed is sensed by the capstan F.G. assembly which produces a sinewave of 480-Hz in the LP mode and 960-Hz in the SP mode. After amplification and processing by ÷ 2 counter, a 240-Hz (LP mode) or 480-Hz (SP mode) squarewave is available as input signal to a standard-time generator/"AND" gate circuit similar to that of the cylinder servo. When the capstan motor is running at the correct speed, the input signal to the standard-time generator/"AND" gate circuit is 240 Hz. Notice that in the LP mode, the 240-Hz signal is available at the output of the first divider. When the machine is operated in the SP mode, an additional frequency divider in the circuit forces the capstan motor to run at twice the speed in order to supply the 240-Hz input to the standard-time generator/"AND" gate circuit.

Output of the gate is a pulse representing the difference between the standard-time generator and the input squarewave representing motor speed. This pulse is integrated and applied to the motor drive system so that the entire circuit stablizes at roughly the correct speed. In a similar manner to the cylinder servo system, the pulse width of the standard-time pulse is modified by the second part of the loop which is the phase control circuitry.

In "Record," the capstan motor provides constant tape transportation speed. In this mode of operation, the feedback signal representing motor speed is taken from the output of the second frequency divider in the speed control chain. Thus, after passing through a divide by 8 counter, a squarewave signal of 30-Hz (SP) or 15-Hz (LP) is available to represent motor speed. This signal, after processing by a pulse amplifier and some delay circuitry, is a sample pulse which is applied as one input to the sample and hold circuit. The reference signal input to the sample and hold circuit is manufactured from the 30-Hz trapezoid produced by the cylinder P.G. As with the cylinder servo, the output of the sample and hold circuit is a DC voltage which represents small increments in speed (phase) changes in the capstan motor operation. This DC voltage is applied to the standard-time generator to modify the pulse width and thus produce a vernier change in motor speed.

During "Playback," the 30-Hz control-track pulse on the video tape is applied to the pulse amplifier in place of the output of the divide by 8 counter. This signal (after processing) becomes the sample pulse. Thus, any changes in transportation speed are sensed by a change in the sample point so that the changes in output of the sample and hold circuit provide appropriate DC control to the capstan motor to correct for the speed/position errors.

Three-phase Fullwave Bilateral Drive Circuit

One of the difficulties in designing a good video tape recorder for home use is to very accurately control the operation of the video scanning process. Most industrial video tape recorders, as well as many of today's home video recorders, employ a belt drive system to operate the headwheel. In principle, the belt drive system drives the headwheel at a speed slightly faster than the nominal 1800 RPM. Locking the headwheel then depends upon use of a servo controlled braking system that drags the headwheel down to the required exact 1800 RPM — depending upon belt slippage to provide the degree of isolation between the main drive and the servo-controlled headwheel. Although this system works well enough with some TV receivers, with others problems of horizontal instability (jitter) appear. Furthermore, the headwheel assembly in many of these recorders is rather massive and is thus difficult to accurately servo control because of the inertia of the rotating mass.

In the RCA VBT200 VCR, a direct-drive motor system, used in conjunction with a relatively low mass headwheel assembly, provides very precise control over headwheel rotation; thus, assuring very accurate horizontal time base timing and freedom from horizontal

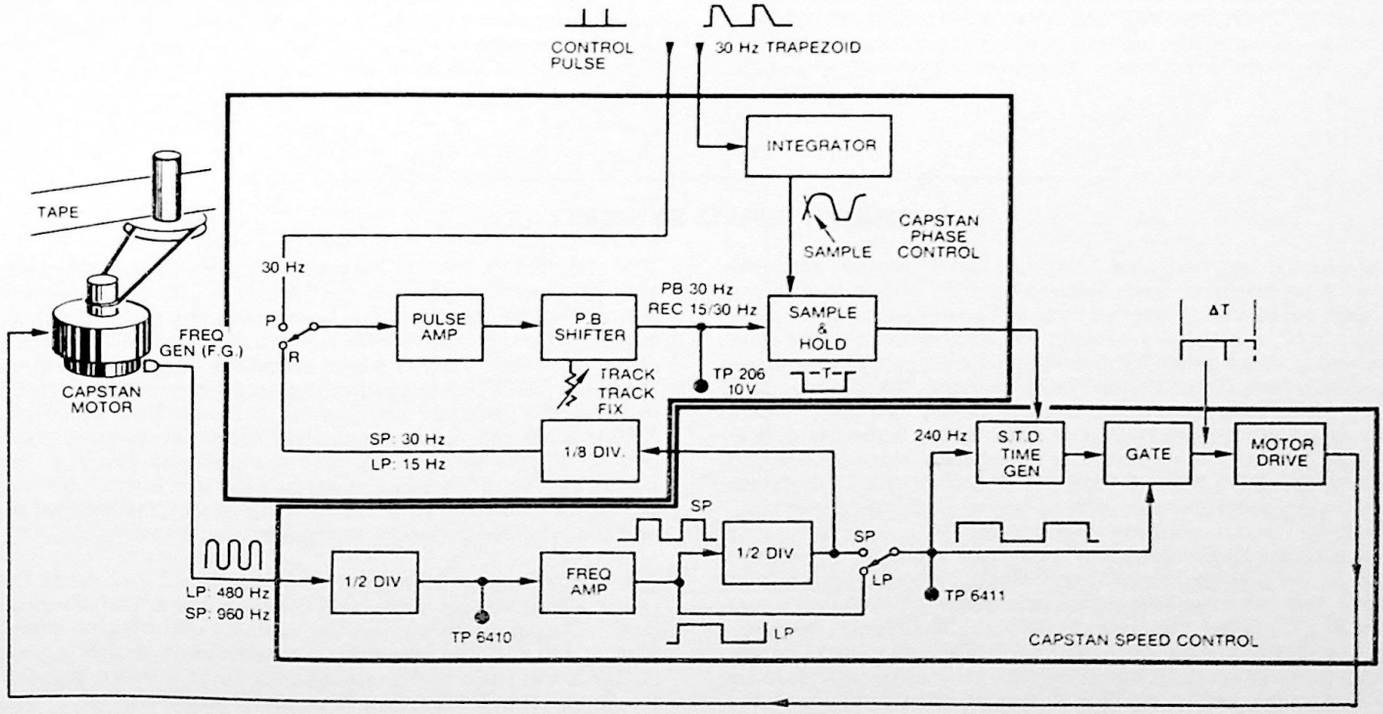

Figure 25. Capstan Servo System

CYLINDER AND CAPSTAN SERVO OPERATION (continued)

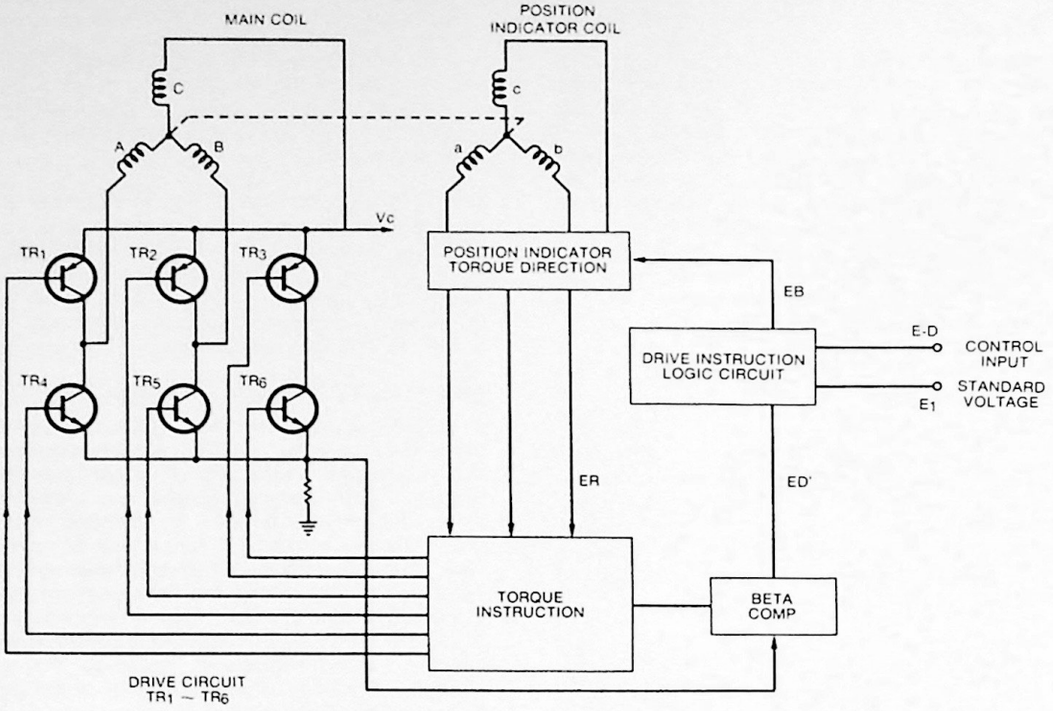

Figure 26. D-D Motor Three-Phase Inverter Block Diagram

problems in nearly all TV sets. To accomplish the objective of providing very close control of the headwheel motor, an entirely new drive concept was invented and this is the direct-drive (D-D) cylinder assembly used in the VBT200.

Although at first glance the motor might appear to be simply a 12-volt DC motor, it is far from that. In reality, the motor used to drive video heads in this machine is a multipole three-phase motor that is driven by a very precisely controlled three-phase AC inverter. The windings, called the main coils of the motor, provide the motive power to drive the motor. Feedback necessary to sustain oscillation of the three-phase invertor is sampled by position indicator coils designed so that the feedback signal always tells the torque instruction circuit which transistor combination should be turned "on" next to sustain rotation of the motor.

The motor speed is modified by control input from the cylinder-servo system which is compared against a standard voltage in the drive instruction logic circuit. The output of the drive instruction logic circuit then is applied to position indicator, torque direction circuitry, and torque instruction circuitry so that the rotation of the motor becomes locked to the cylinder-servo system instructions.

CYLINDER SERVO SYSTEM DETAILS

As previously learned, the cylinder servo system operates differently in "Record" and "Play." Figure 27 shows that in the "Record" mode, the cylinder servo is locked to vertical sync taken from the sync separator — located on Chroma board. Input sync is applied to an amplifier stage in IC 201 via plug 21 pin 3 and the **record/playback** switch. In the Playback mode, the cylinder runs at a constant 1800 R.P.M. because it is locked to a 60-Hz signal obtained via a countdown chip clocked by the 3.58-MHz crystal oscillator on the Chroma board. In either case, the output of the IC 201 amplifier is applied to a ÷ 2 counter (MM — one-shot multivibrator) which outputs a 30-Hz signal at pin 26 of the chip. This 30-Hz signal supplies the control track signal during "Record," as-well-as furnishing input (via chip pin 21) to the record shifter one-shot multivibrator (MM). Record shifter output is at pin 18 of the chip. This signal, after differentiation into a narrow pulse, is applied back into pin 14 of the IC to act as the sample pulse for the sample gate. (The record shifter stage is an adjustable time-delay circuit that allows the vertical-sync pulse to be physically positioned on the tape so that it occurs soon after head switching during playback.)

The other signal used in the sampling process is a 30-Hz trapezoid. This signal is generated by the cylinder PG (pulse generator) circuit. The cylinder PG signal is an alternating positive and negative pulse taken from the PG magnetic pick-up located in the D-D motor assembly. The PG signal enters the servo system through the Motor Drive board which contains a differentiator circuit and amplifier that receives input via P27-1. Output from transistor TR 2115 is a positive pulse signal when head-one contacts the tape and a negative pulse when head-two contacts the tape. These pulses are fed to the Servo board through wire jumper J2 — input signal is viewable at TP 211. Following TP 211, the positive pulse and the negative pulse are separately processed.

The positive pulse is applied to IC 201 pin 2 (via diode D206) where it triggers one of the two PG-shifter one-shot multivibrators (MM). Output of this one-shot multivibrator triggers **(sets)** a flipflop (FF) in IC 201. The other PG shifter multivibrator located in IC 202 is triggered by the negative PG pulse which is inverted by transistor TR 211. Transistor T211 signal **resets** flipflop "FF" in IC 201.

CYLINDER AND CAPSTAN SERVO OPERATION (continued)

Output from flipflop "FF" is a 30-Hz squarewave signal in which the duty-cycle of the positive and negative half-cycles are variable via the individual **PG shifter** controls. This signal (viewable at TP 201) drives a trapezoid generator which is an integral part of IC 201. The 30-Hz PG signal also provides head-switching signals to turn "on" the individual head preamplifiers on the FM Modulator/Head-Amplifier board.

The PG flipflop output is applied to the trapezoid generator via IC 201 pin 15. The trapezoid generator generates a 30-Hz trapezoidal signal that is timed so that the previously described sample pulse (IC 201 pin 14) samples the center of the trailing edge of the trapezoid signal when the headwheel (upper cylinder) is running at the correct speed and locked to the system signals. Sample-gate action can be viewed with a dual-trace scope by scoping test points TP 204 (sample gate-pulse signal) and TP 205 (trapezoid signal).

The sample gate output (IC 201 pin 12) is a DC voltage of approximately +6.5V which swings "up" or "down" depending upon where the sample is taken on the trapezoid, as determined by the physical position of the heads on the video tape at the instant of sampling. This voltage, limited by diodes D209 and D210, is applied to pin 10 of IC 202 where it modifies the pulse width of a one-shot multivibrator (MM) which serves as the standard-time generator. Associated with this one-shot multivibrator is the **cylinder free-run** control whose adjustment sets the pulse width of the standard-time generator so that the cylinder free-running speed is very close to 1800 R.P.M. Standard-time generator output (IC 202 pin 2) is sent to a logic "AND" gate located on the Motor-Control board via jumper J1.

Contained on the Motor Drive board is the motor speed control circuitry associated with the cylinder motor FG (frequency generator) pick-up. As was learned, the cylinder motor FG signal is a 1.8-kHz tone which is applied to the input of a three-transistor "FG amplifier" — transistors TR 2101, 2, 3. (The input signal is observable at TP 2101.) FG-amplifier output is counted down to 900 Hz by counter IC 2101. The 900-Hz output is applied to gate transistor TR 2104 and also fed back to pin 12 of IC 202 on the Servo board where it triggers the standard-time generator (one shot) contained in the IC. Also entering the standard-time generator is the output of the phase-control circuitry of IC 201 (pin 10 of IC 202) along with the cylinder free-run control voltage. The combination of the bias introduced by **cylinder free-run** control (R245) and the DC phase-control signal sets the output pulse width of the standard-time generator — output is via pin 9 of IC 202. This signal is sent back to the gate transistor (TR 2104) on the D-D Motor Drive board via jumper J1.

Recall, that the speed-control gate (TR 2104) compares the counted down (900 Hz) FG pulse and the standard-time generator pulse, producing an output which represents the time difference between the two. Circuit parameters are such that the output of the filter amplifier (three blocks) that drives D-D motor-control IC 2102 pin 5 is a DC voltage of approximately 4.8 volts when the D-D motor speed is correct and the servo system is locked. The feedback loop conditions are such that if the system is not locked, or the motor is tending to run slow, the DC input to pin 5 of IC 2102 will be somewhat greater that the nominal 4.8 volts. Conversely, if the motor speed tends to be fast, the IC 2102 input will be somewhat lower than the nominal 4.8 volts.

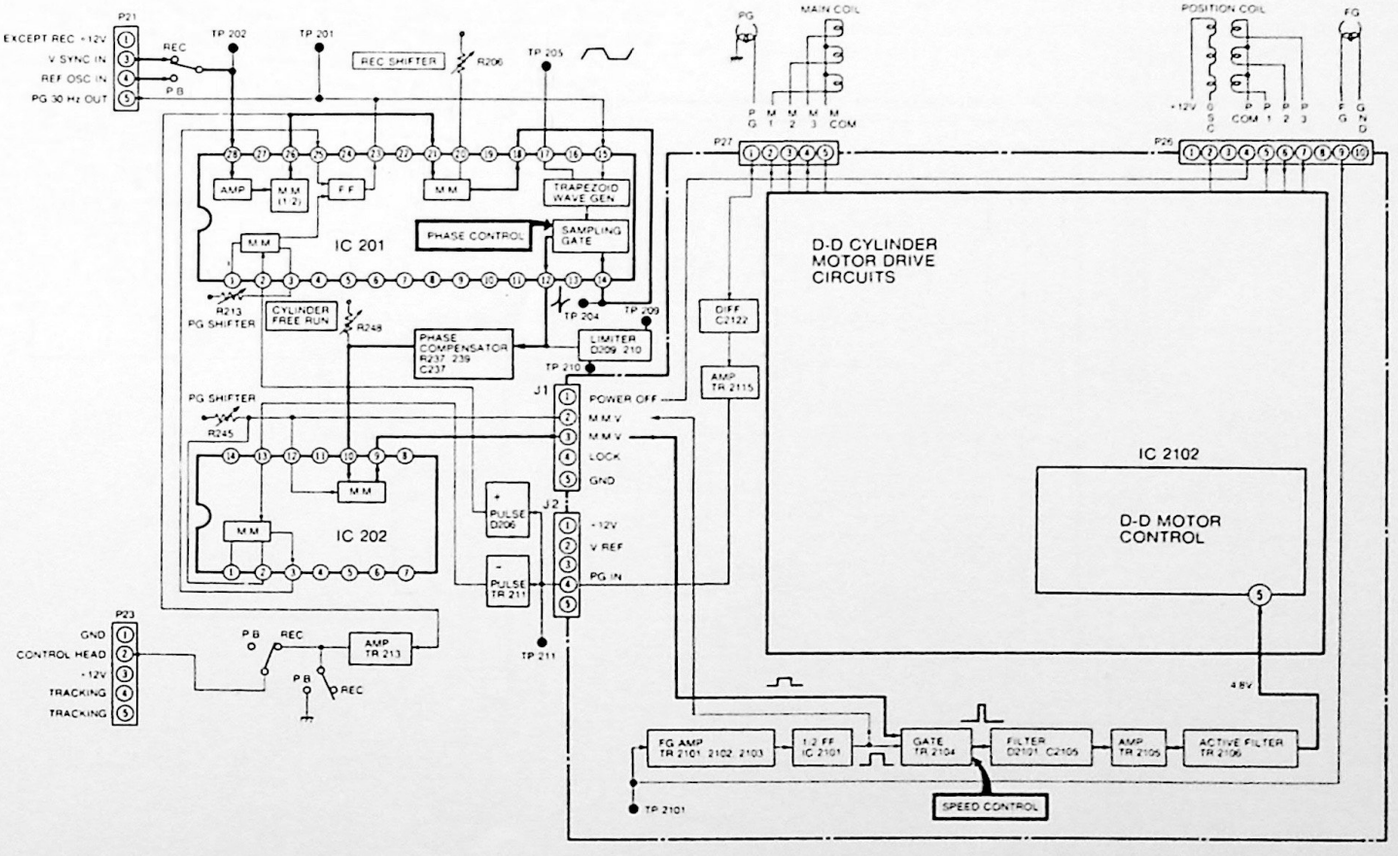

Figure 27. Cylinder Servo Detailed Block Diagram

CAPSTAN SERVO SYSTEM DETAILS

The capstan servo system is similar in concept to that of the cylinder servo. As with the cylinder servo, it has been learned that the capstan servo has two modes of operation. In "Record" mode, the capstan servo system maintains constant tape speed for either 2-hour (SP) or 4-hour (LP) operation. In playback, the system maintains constant speed as-well-as maintaining position control of the tape so that the video heads on the cylinder unit will properly track the recorded information on the video tape.

To maintain constant tape speed in "Record," the capstan servo is referenced to the cylinder PG derived trapezoid signal. The trapezoid signal, after some integration by "ramp-changer" capacitor C218, is applied to sample-gate transistor TR 203 along with the sample-gate signal derived from the capstan PG signal. The sample-gate signal is derived from the counter system on the SP/LP Select board — 30 Hz in "SP" and 15 Hz in "LP." Output from the sample gate is an amplitude-limited DC voltage (limiter diodes D203 and 204) which modifies the pulse width of the capstan standard-time generator (MM) — via IC 201 pin 9. (Basic pulse width is set with **capstan free-run** controls.) Output from the standard-time generator drives a logic "AND" gate, along with the capstan motor FG signal. The output of the speed-control "AND" gate leaves IC 201 via pin 10. This pulse, after integration in a filter network consisting of capacitor C222 and associated components, is base bias for amplifier transistor TR 206. Also associated with amplifier TR 206 is a logic input from the Transport/Control board which indicates that the logical sequences necessary to initiate various modes of operation have been completed before the capstan motor is allowed to operate and move tape. Output from amplifier TR 206 is applied to a three-transistor motor drive circuit that supplies DC voltage to the capstan motor. This voltage leaves the Servo board via P25-3.

The rough speed control of the capstan motor is accomplished in basically the same manner as was described for the cylinder servo. In this case, the capstan FG signal (960 Hz or 480 Hz depending upon the mode of operation) is fed to the Servo board via P25-4 where it is applied as input to a flipflop (FF) contained on IC 201 — input signal is viewable at TP 203. Output of this flipflop (half input frequency) emerges at pin 6 as a 480-Hz or 240-Hz signal (SP or LP) which is directed to the SP/LP Auto Select board via P28-3. An amplifier/inverter stage on the SP/LP board processes the signal to a level sufficient to drive a multivibrator back on the Servo board — part of IC 201. But more importantly, this serves as a pickoff point where the additional stage of frequency division can be switched "in" to apply 240-Hz signal to the standard-time generator when in the "SP" mode.

Also on the SP/LP board is the ÷ 8 counter that produces the capstan pulse generator (PG) signal for input to the servo phase-control circuitry when the unit is in the "Record" mode. A pickoff from this counter supplies the aforementioned SP-mode 240-Hz FG signal.

As previously learned, the 30- or 15-Hz counter output "PG" signal is processed into the sample pulse which samples the trapezoid signal to produce the control voltage necessary to provide correct motor speed — signal frequency is 30 Hz in the "SP" mode and 15 Hz when the unit is in the "LP" mode.

The capstan PG signal enters the Servo board on P25-5 where it is routed to the "Record/Play" switch. When the unit is in the "Record" mode, the signal is amplified by transistor TR 212 and then serves to trigger the tracking shifter one-shot multivibrator part of IC 202. Output of this stage, which interfaces with the **TRACKING** control when the unit is in playback, emerges from IC 202 via pin 7. After some additional processing (differentiation), the signal is applied to the sample gate as the sample pulse — indicative of the motor speed error.

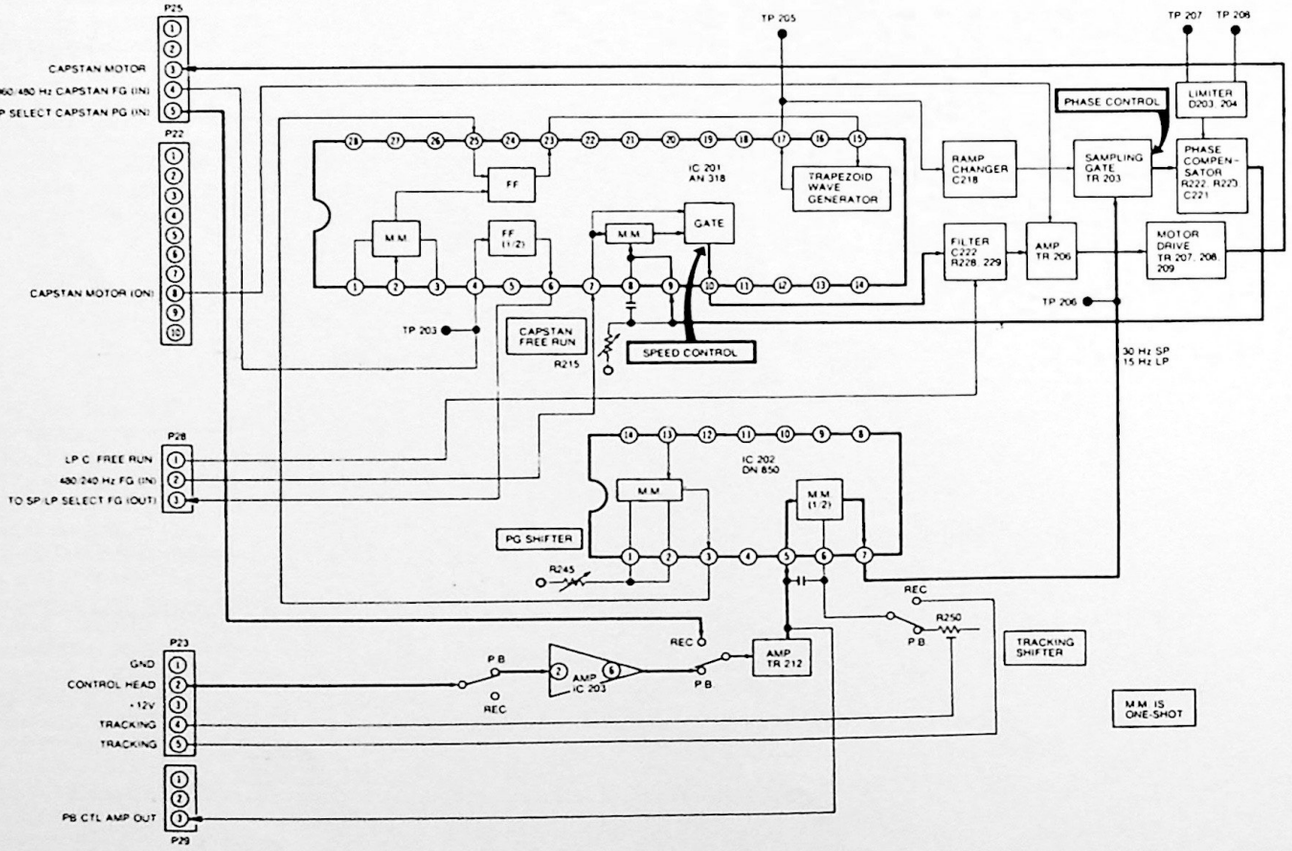

Figure 28. Capstan Servo Detailed Block Diagram

SP/LP AUTO SELECT CIRCUITS

The VBT200 VCR employs special logic and control circuitry to allow the user to manually select 2-hour or 4-hour operation when recording a tape. During playback, logic and timing circuitry samples the control-track signal and directs electronic switching, causing the machine to play back the tape at the correct speed.

In addition to setting the capstan motor speed for SP (Standard Play) or LP (Long Play) operation, the SP/LP Auto Select Circuit controls four additional functions that are necessary for proper SP and LP performance during "Record" and "Playback." Through use of a control voltage known as "LP high" (+12V source in LP-mode), the audio record and playback equalization are changed to optimize frequency response in both modes of operation. Also during the LP Record mode, additional video pre-emphasis is introduced and the "1/2-FH" frequency interleave circuitry is activated. In Playback mode, the "LP-high" voltage switches in complementary video-frequency de-emphasis and an "1/2-FH" interleave cancellation squarewave signal.

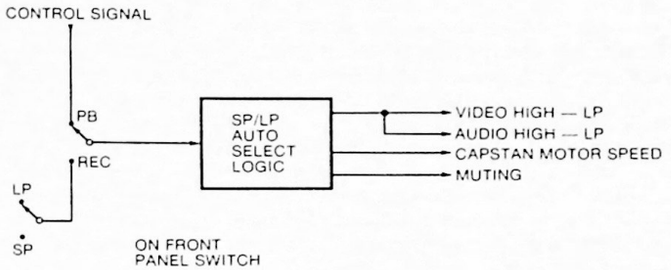

Figure 29. SP/LP Logic Functions

The SP/LP Auto Select board also provides a muting voltage which is present when the machine senses erroneous control-track frequency — indicative of wrong speed operation. For the interval of time necessary for the machine to change speeds and stabilize its operation, the muting voltage is present. Finally, and most important, the SP/LP Auto Select circuitry electronically switches the capstan motor speed from the SP (2 hour) to the LP (4 hour) mode or vice versa.

Capstan Motor Speed Selection

As was learned in the discussion of servo operation, the capstan motor SP/LP speed selection is accomplished by switching "in" or "out" an extra stage of frequency division in the capstan FG (frequency generator) circuit. In order to satisfy the requirements of the capstan servo system, the FG signal input to the standard-time generator and logic "AND" gate must be a constant 240 Hz, as shown in the Figure 30. During "SP-Record," base voltage is applied to transistor TR 6405, causing it to conduct and load down the signal output of amplifier TR 6411. Thus, it can be seen that the signal input to the standard-time generator (viewable at TP 6411 on SP/LP Select board) must come from the output of IC 6403 pin 3 which is an additional ÷ 2 count. Under these conditions, the capstan motor is forced to run at the SP speed.

When LP operation is desired, transistor TR 6406 is turned "on" and thus shorts the signal from the pin 3 output of IC 6403. At the same time, signal from the collector of TR 6405 is applied to the standard-time generator via "OR" gate diode D6418. When the unit is in "Play," the appropriate choice of FG input signal from the "OR" gate is automatically selected by the logic circuit contained on this same board. The action of the circuit in this area being such that either transistor TR 6405 is driven into conduction or transistor TR 6406 is conducting, making the appropriate choice of FG signal available to the standard-time generator and logic gate.

SP/LP Auto Select Logic

The logic circuit used to sample the control track and control the SP/LP operational modes is fairly sophisticated as can be seen in Figure 31. Basically, two transistors (TR 6402 and TR 6403) are connected in what is known as a "set/reset flipflop." This term means that when the FF (flipflop) is triggered into one mode, it will remain so until it is triggered into the opposite state. Notice in the drawing, the output of this circuit is a line which is designated as "LP high" — TP 6406 voltage. This line is applied to a pair of "OR" gates consisting of diodes D6408 and D6409, and D6410 and D6411 respectively. Outputs from these gates ultimately drive two switching transistors designated TR 6405 and TR 6409.

During "LP-Record" mode, +12 volts applied to the base of transistor TR 6406 (via logic diode D6409) causes this device to saturate. This action shorts out the FG signal available from amplifier transistor TR 6411 and forces the FG input to the standard-time generator to be that obtained from the extra stage of frequency division in IC 6403. This action also cuts off switch transistor TR

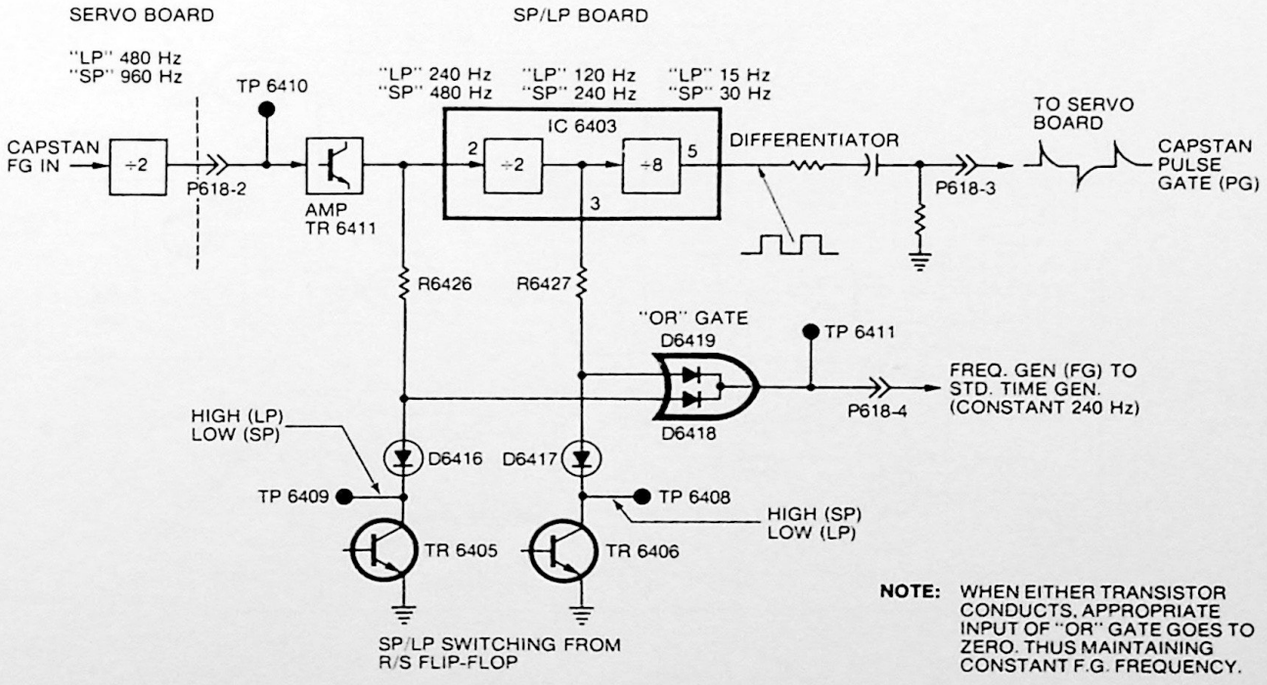

Figure 30. SP/LP Capstan Speed Selector

SP/LP AUTO SELECT CIRCUITS (continued)

6405 causing its collector voltage (TP 6409) to go high (+12V) providing sources of voltages designated **"video LP high"** and **"audio LP high"** to become available at P619-5 and P619-6. These voltages are routed to the Luminance Process board and the Audio board respectively.

When in the "SP-Record" mode, switch transistor TR 6406 is turned "off" and switch transistor TR 6405 is thus saturated driving the TP 6409 "LP-high" line to the **low** (0V) logic state. At the same time, diode D6416 shorts the signal obtained directly from transistor TR 6411 making the FG signal available to the standard-time generator that was obtained from the extra stage of frequency division in IC 6403.

In "Play," the operating mode is determined by the "LP-high" output of the R/S flipflop — DC voltage at TP 6406. As shown in the drawing, this voltage is **high in the LP mode** and **low in the SP mode.** Whenever the machine is in the LP mode of operation, the output of the R/S FF is **high** at TP 6406. Under these conditions, bias voltage is applied to the base of switch transistor TR 6406 via "OR" gate diode D6408. Now, switch transistor TR 6405 is cut off and the proper conditions necessary for LP operation are established. Conversely, when the machine is in the SP mode of operation, the flipflop output is **low** at TP 6406 and switch transistor TR 6406 is cut off. Under these conditions, necessary SP mode conditions are satisfied.

The remainder of the circuitry on this simplified schematic (left side) is dedicated to controlling the state of the R/S flipflop. Notice that two input lines control the flipflop. These are designated "set" (S) and "reset" (R). When the machine is operating in the correct mode (playing back tape correctly), signals are not present on either of the control lines. In the event of an error condition, a pulse voltage appears on either the (S) or the (R) line which causes the flipflop to switch to the other state and set up the necessary conditions for the proper Playback mode.

For example, if the machine is running too slow (such as if the machine was running in the LP mode, but the tape to be played back was an SP recording), a pulse will appear on the FF (S) line (TP 6407) which will cause the flipflop to be driven to the opposite state to establish the SP Playback mode. The opposite error condition (LP recording with machine in SP speed mode) will cause a pulse to appear on the (R) line (TP 6405) which will cause the machine to enter the LP operational mode. The actual pulse that is used to set or reset the flipflop is produced by transistor TR 6401 (differential pulse amplifier — DPA). The base of this device is timed by the control-track signal after it is processed by a pulse clipper stage contained in IC 6401 and a "T-type" flipflop. (A T-type flipflop is an IC device — IC 6402 — which changes state every time it is triggered. Thus, the device acts as a ÷ 2 counter.)

As can be seen in Figure 31, (normal operation), the 30-Hz control-track signal at TP 6401 triggers the "T" flipflop to change state on the leading edge of the control-track signal. Thus, the output of the "T" FF is a 15-Hz squarewave which is viewable at TP 6402. The leading (rising) edge of the "T" FF (TP 6402 signal) triggers a monostable, or one-shot multivibrator, which has a conduction period of approximately 25 ms. This multivibrator, designated as "MM 1" in IC 6401, produces a trigger for a second monostable, one-shot designated as "MM 2." Notice in the timing diagram that the second one-shot triggers on the rising edge of the MM-1 signal. The period of this one-shot is also 25 ms. These two signals are combined in a logical "AND" function by diodes D6406 and D6407. This output is then connected in another logic "AND" configuration to the collector of TR 6401 (DPA). Thus, the DPA pulse is prevented from triggering the R/S flipflop except in intervals of time when both diodes D6406 and D6407 are reverse biased due to both one-shot multivibrator outputs being in the logic **high** states. This condition only occurs in the event of a speed error which is causing the machine to run slow.

The logic necessary to control the "set" (S) line of the R/S flipflop is provided by taking output signal from MM 1 and inverting it in transistor TR 6404. The output of inverter transistor TR 6404 is utilized in a logical "AND" configuration with the DPA signal via diode D6404. As can be seen in the timing diagrams, a pulse from the DPA to set the flipflop via TP 6407 is only available under conditions when the capstan motor is running too fast. Application of this pulse then changes the state of the flipflop and causes the machine to enter the LP mode of operation which is necessary to restore correct frequency to the control-track signal.

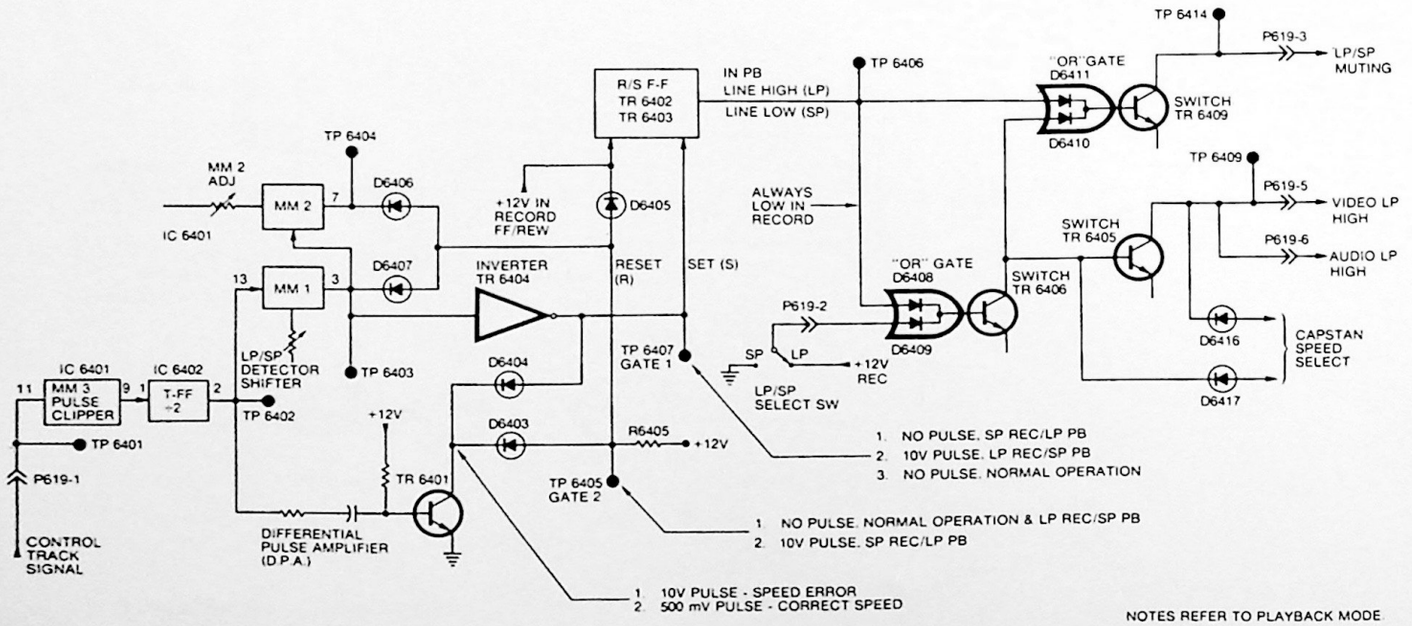

Figure 31. SP/LP Auto-Select Circuitry Block Diagram

SP/LP AUTO SELECT CIRCUITS (continued)

SP REC/SP PLAY OR LP REC/LP PLAY
(Normal Operation)

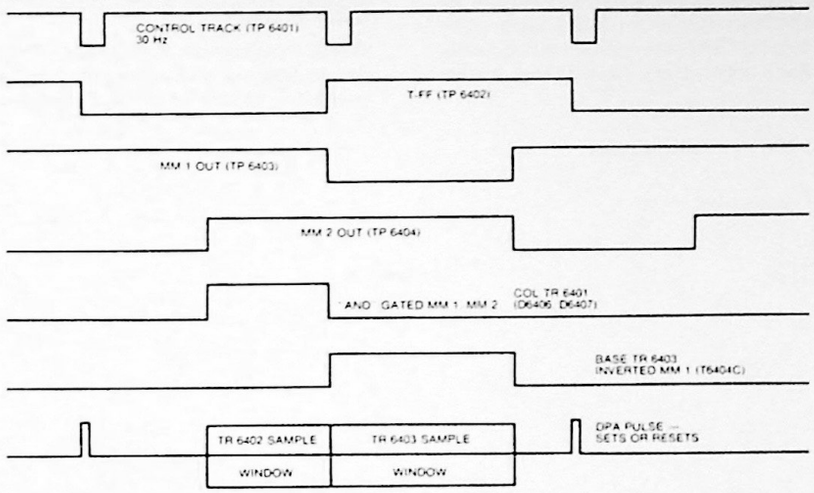

LP REC/SP PLAY
(Too Fast)

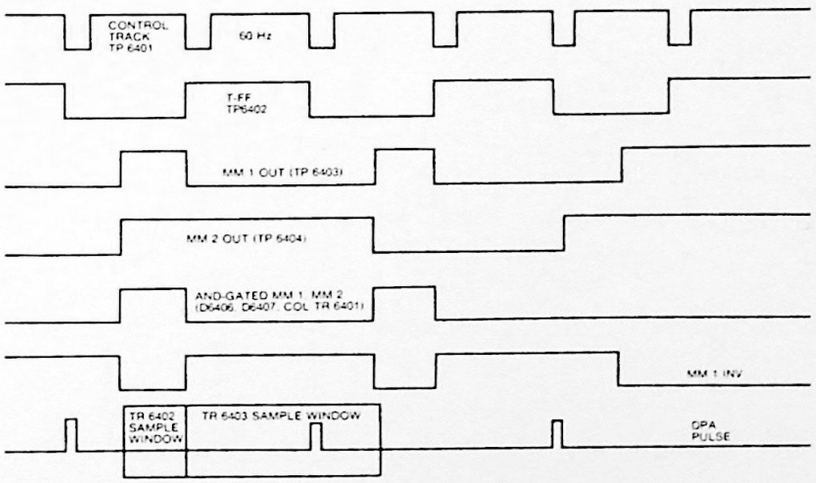

SP REC/LP PLAY
(Too Slow)

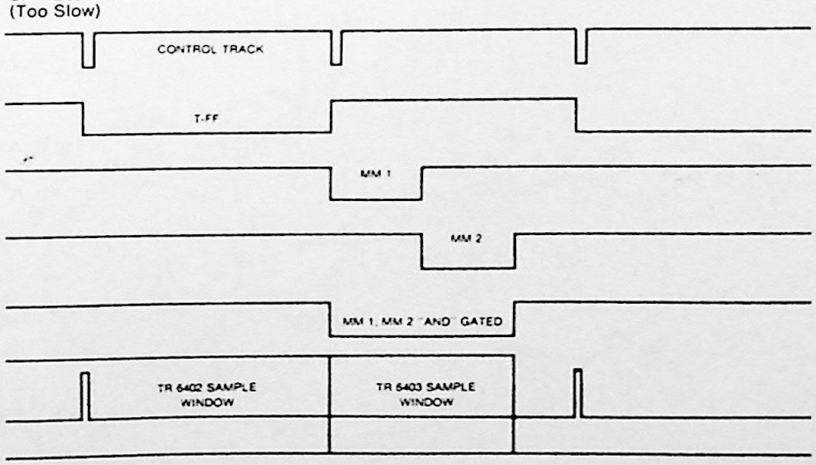

Figure 32. SP/LP Auto Select Timing Diagrams

MECHANISM OPERATION

The mechanical operation of the VBT200 Video Cassette Recorder is comparable in many respects to an audio cassette recorder mechanism. Tape is moved through the mechanism by a servo-controlled capstan drive system. A principle advantage of the VHS tape system is the simple and direct-routed tape handling system. The simplicity of the VBT200 mechanism will be particularly appreciated by the service technician. As a further assist to servicing, the following operational mode descriptions and drawings should be helpful when troubleshooting mechanical problems.

Stop Mode

When mechanism is in "Stop," and no drive is applied to the supply or takeup reel turntable, brakes "A" and "B" are applied to prevent rotation of either turntable.

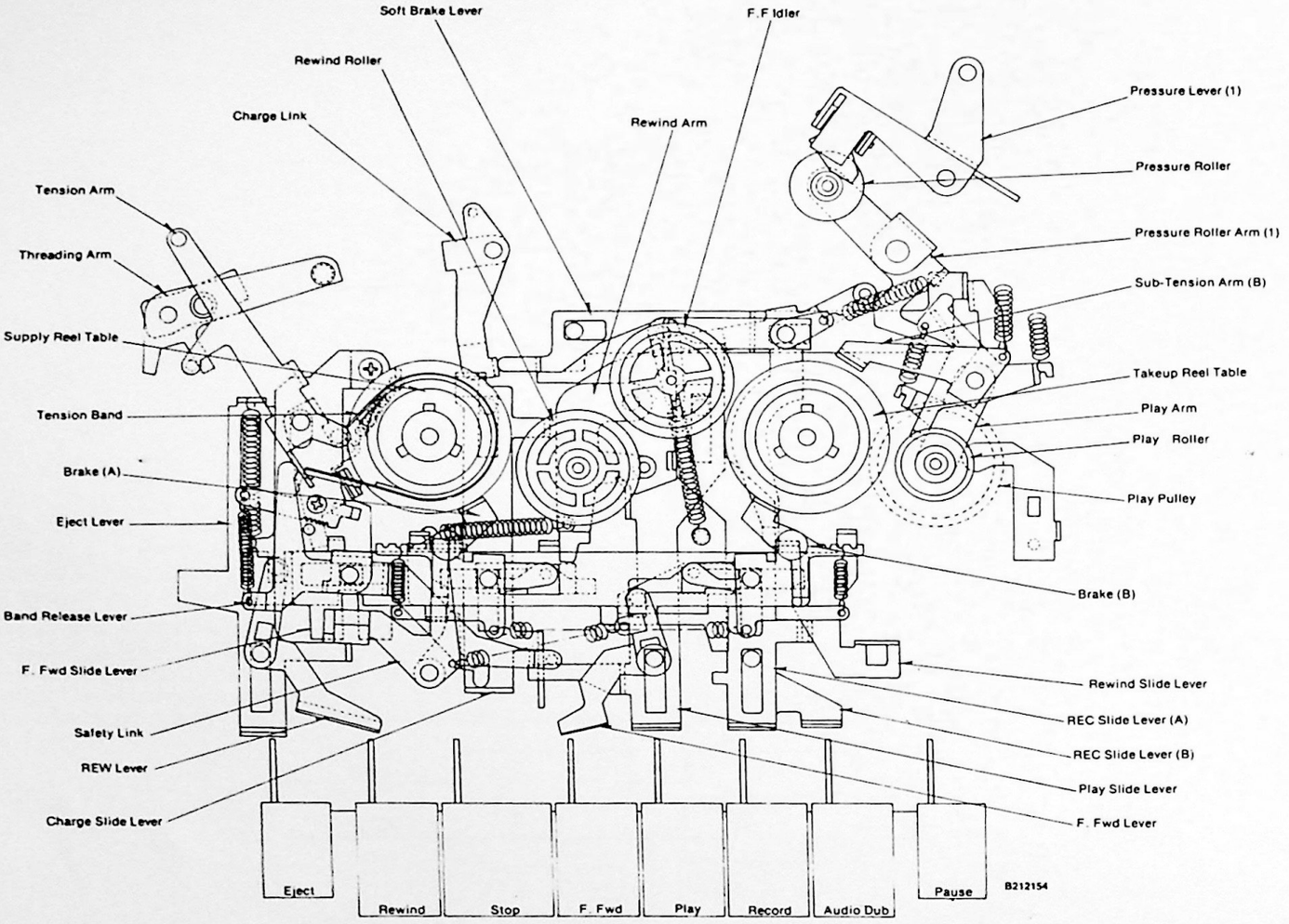

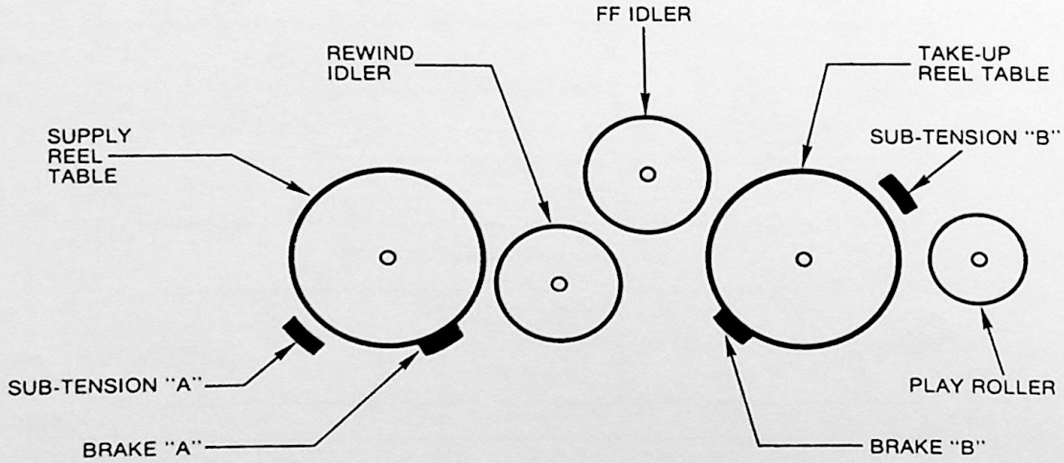

Figure 33. "STOP" Mode Operation

MECHANISM OPERATION (continued)

Play Mode

In "Play," brakes "A" and "B" are released, and the Play roller contacts the takeup reel turntable and drives it through a friction clutch on the bottom of the play roller assembly. In this way, constant takeup tension is maintained on the tape so that it winds smoothly into the cassette.

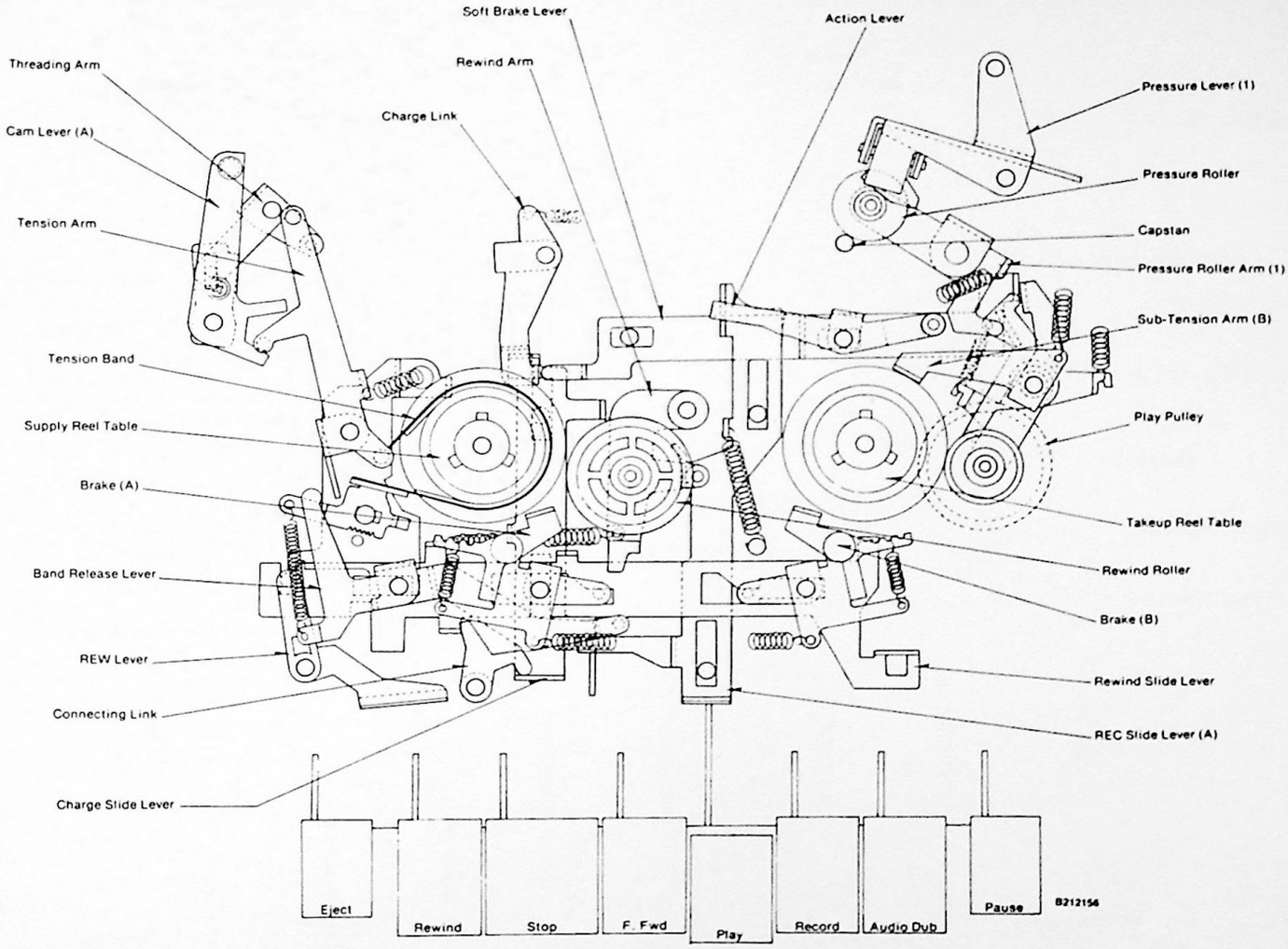

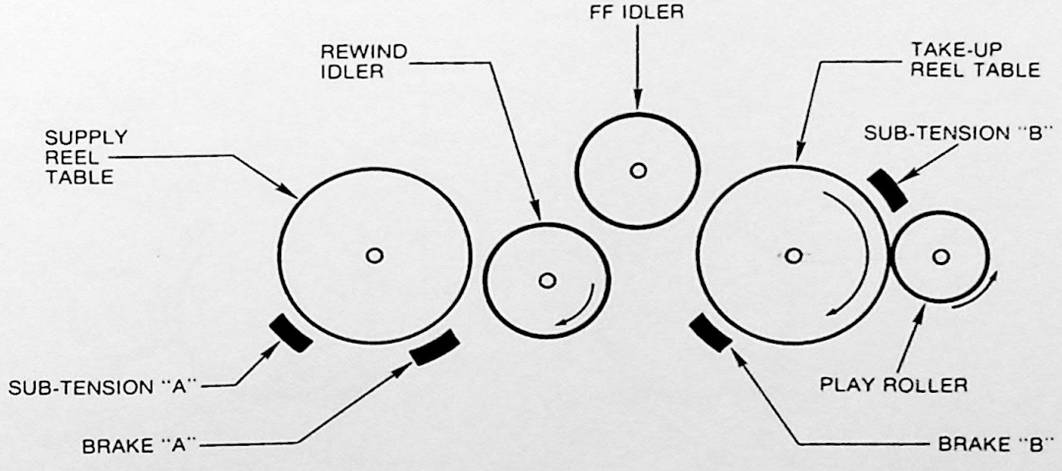

Figure 34. "PLAY" Mode Operation

MECHANISM OPERATION
(continued)

Fast Forward Mode

When the unit is in Fast Forward, brakes "A" and "B" are released, and power is applied to the takeup turntable from the rewind idler via the fast forward idler. In this manner, the takeup turntable is driven at a speed which allows a full VK 250 (2-hour/4-hour) cassette to run through the machine in less than 4 minutes. Tape tension is maintained during the Fast Forward mode of operation by subtension brake "A" which applies braking to the supply reel turntable so that back tension is maintained on the tape; thus, the tape winds smoothly on the takeup reel turntable.

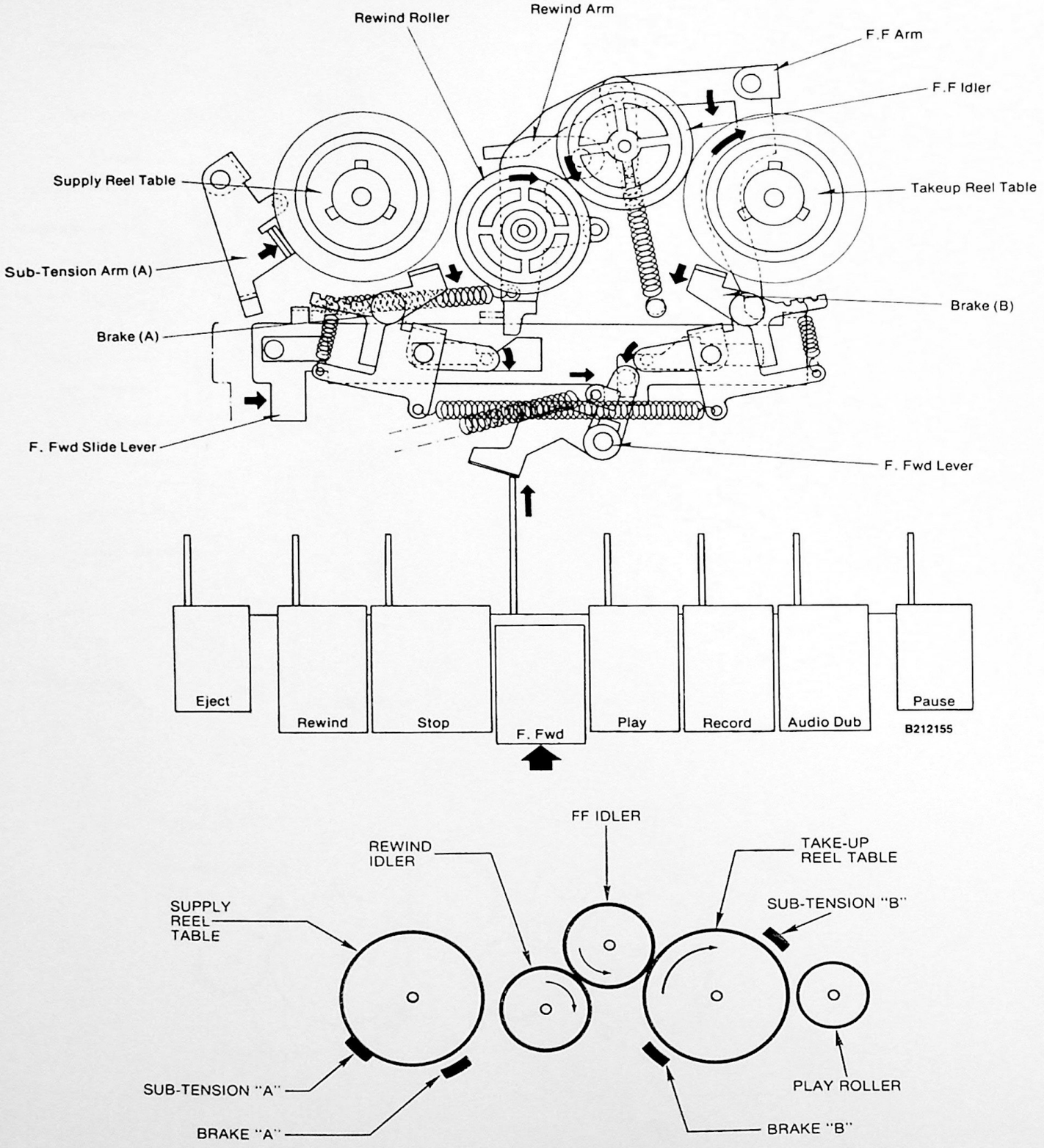

Figure 35. "FAST FORWARD" Mode Operation

MECHANISM OPERATION
(continued)

Rewind Mode

Rewind operation is similar to Fast Forward except the rewind idler directly drives the supply turntable. No subtension braking is required in Rewind due to the back tension provided by the drag of the reel stop sensor and counter assemblies.

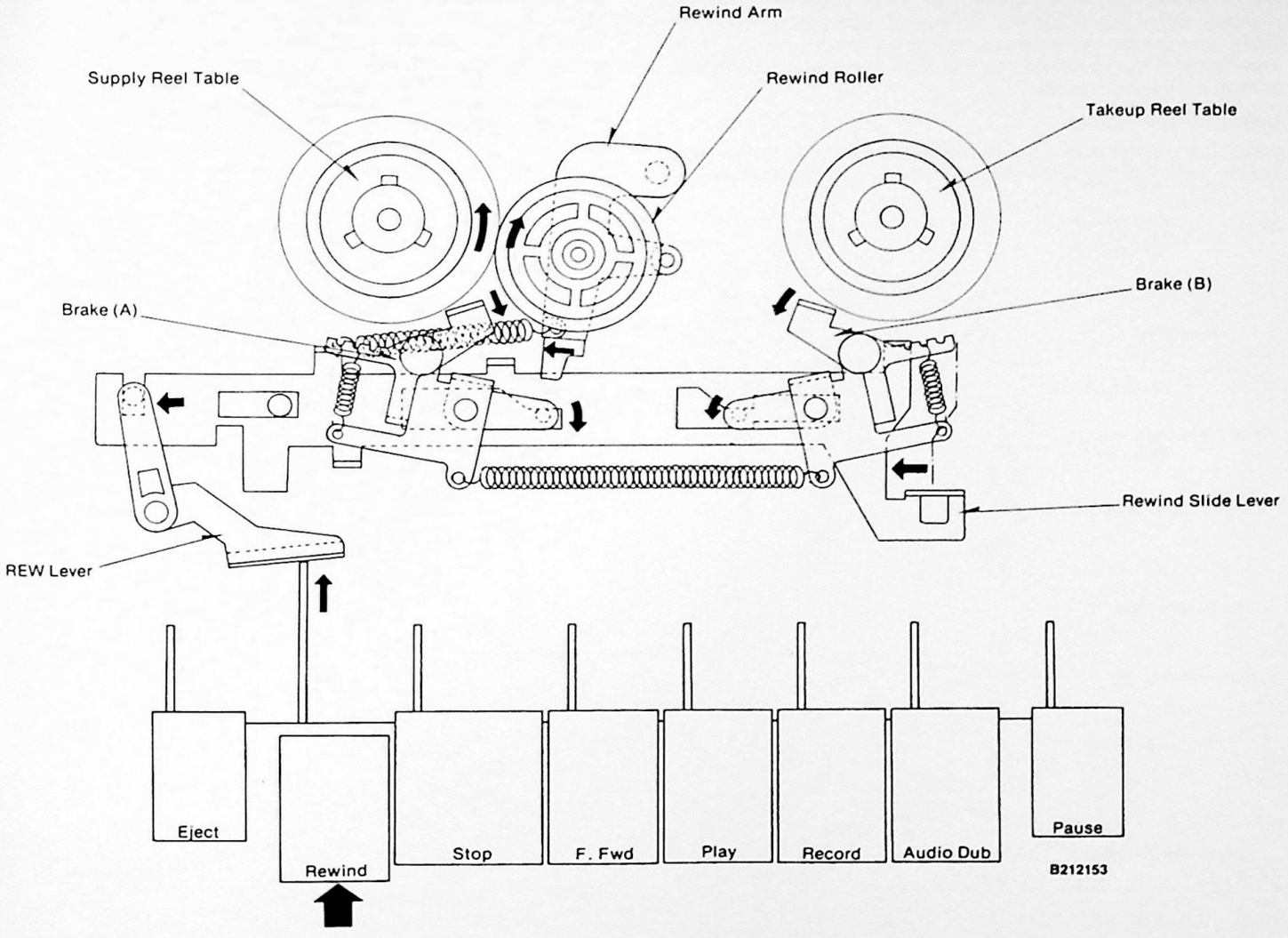

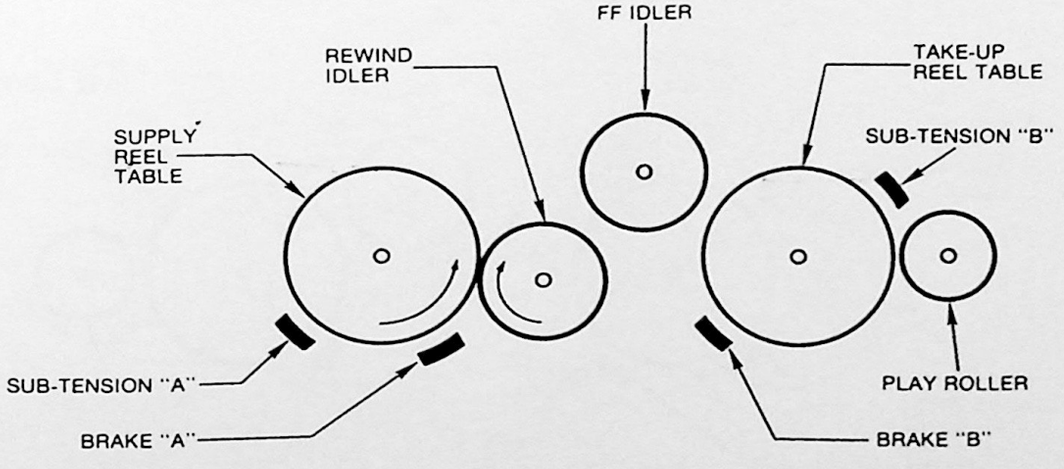

Figure 36. "REWIND" Mode Operation

MECHANISM OPERATION
(continued)

Loading Mode

As the tape loads against the D-D cylinder assembly, it is desirable that it be taken from the supply side of the cassette in order to prevent the possibility of pulling the leader end of the tape loose from the takeup spool in the cassette, or making it necessary for the machine to run through a length of leader before it contacts the actual video tape. For this reason, subtension brake "B" locks the takeup reel turntable during the loading mode; thus, preventing it from rotating and the tape from being withdrawn from the takeup turntable.

Loading Completion

When the mechanism is put in the Play or Record modes, and before tape transportation begins, tape is withdrawn from the cassette by the loading mechanism and wrapped 180 degrees around the D-D cylinder unit to allow it to contact the upper cylinder (video-head) assembly. When the PLAY button is depressed, the transport control logic circuit actuates the loading motor, causing two counter-rotating gear rings to rotate in opposite directions. This action causes the left tape guide to pull tape out of the cassette as it moves in a clockwise direction towards a "V-stop" block which limits its travel. Similarly, the right tape guide assembly rotates in a counterclockwise direction to pull the loop of tape withdrawn from the supply side of the cassette into contact with the D-D cylinder unit. At the completion of loading, a tab on the back of the loading assembly trips a leaf switch (load completion switch) which signals the transport control logic circuit that loading is complete.

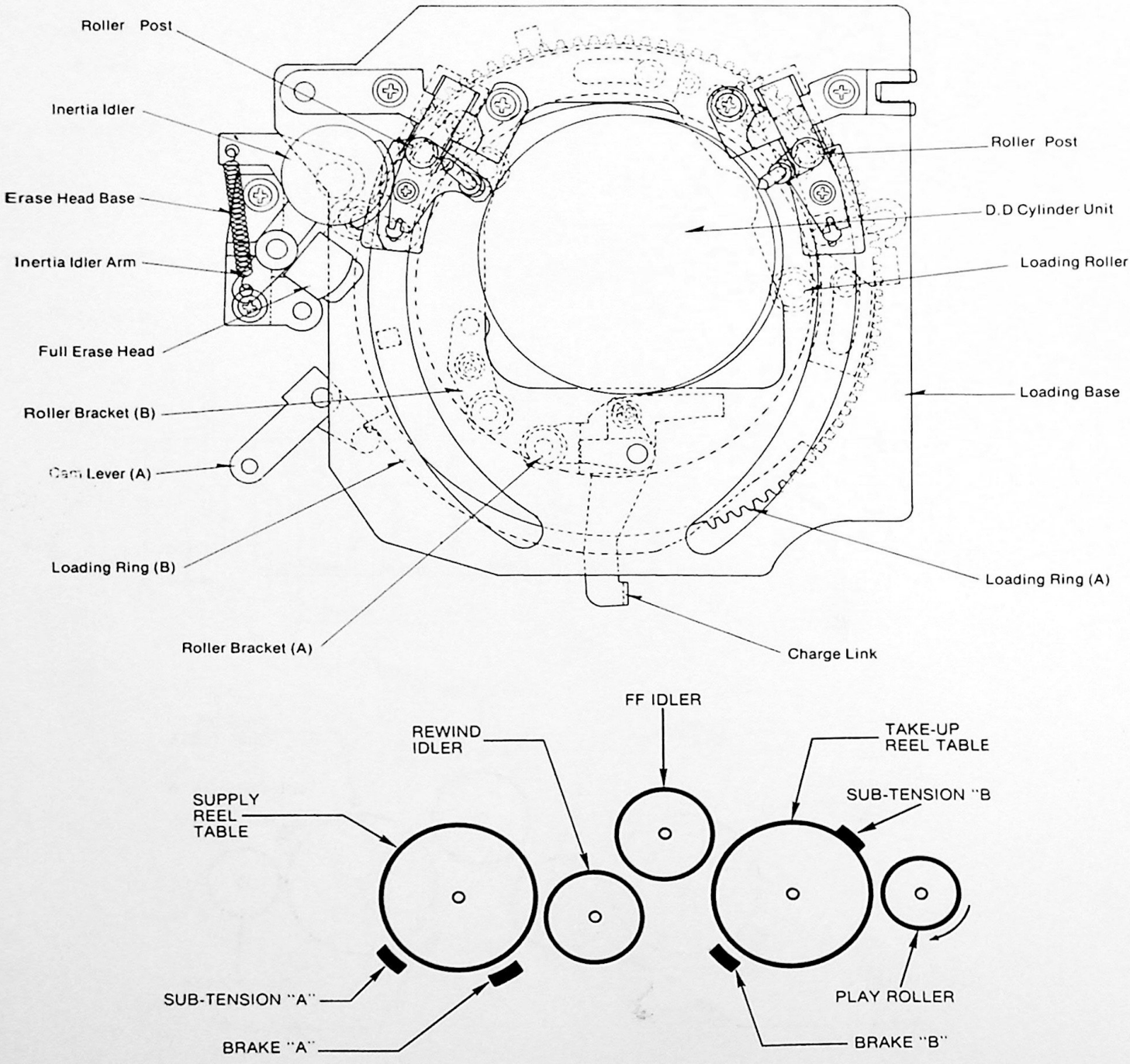

Figure 37. "LOADING" Mode Operation

MECHANISM OPERATION
(continued)

Unloading Completion

When the unit is in the "Play" or "Record" mode, and the STOP button is pressed, it is necessary for the tape to be unloaded from the D-D cylinder assembly before the unit can be placed in "Fast Forward" or "Rewind," or the cassette removed. When STOP is depressed, the logic circuit directs the loading motor to run in the opposite direction than it did from loading. Thus, the left and right side tape guides rotate back into the position they were at the beginning of loading.

Unloading Mode

During unloading, the machine is automatically placed in the rewind mode (rewind idler contact supply reel table) and motor power is reduced. Thus, the reduced speed motor operation provides enough rewind drive to the supply turntable to completely wind the loop of tape back into the cassette.

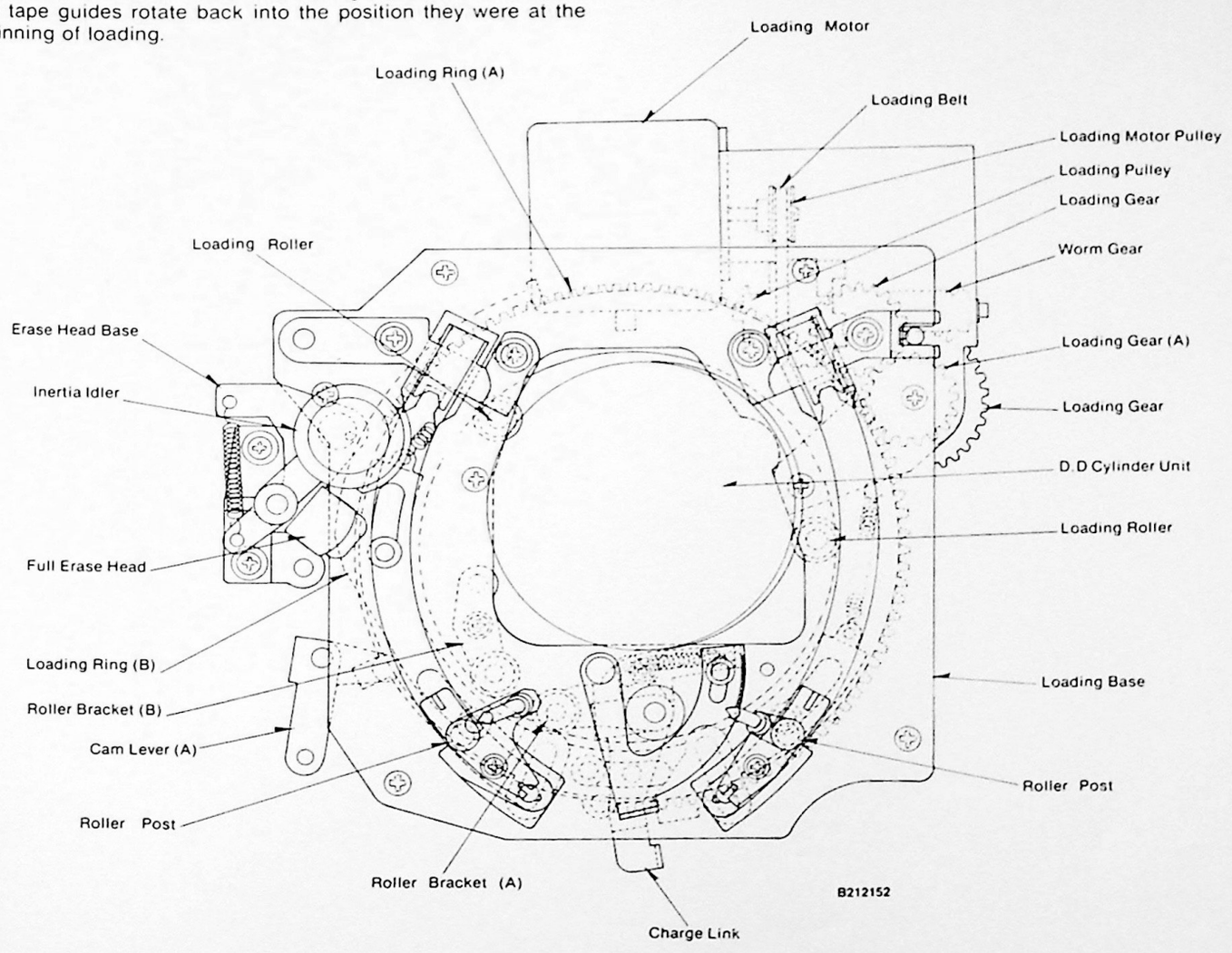

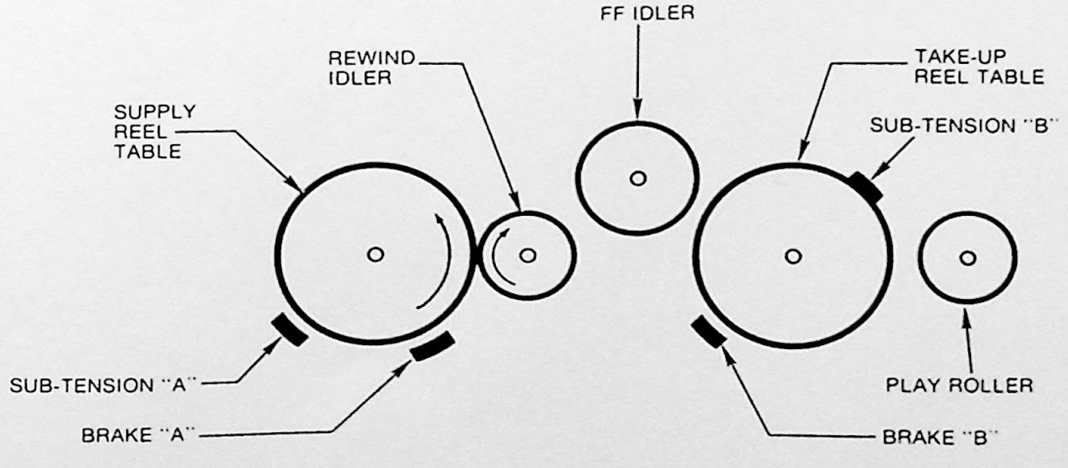

Figure 38. "UNLOADING" Mode Operation

VCR-1

E-E MODE BLOCK DIAGRAM

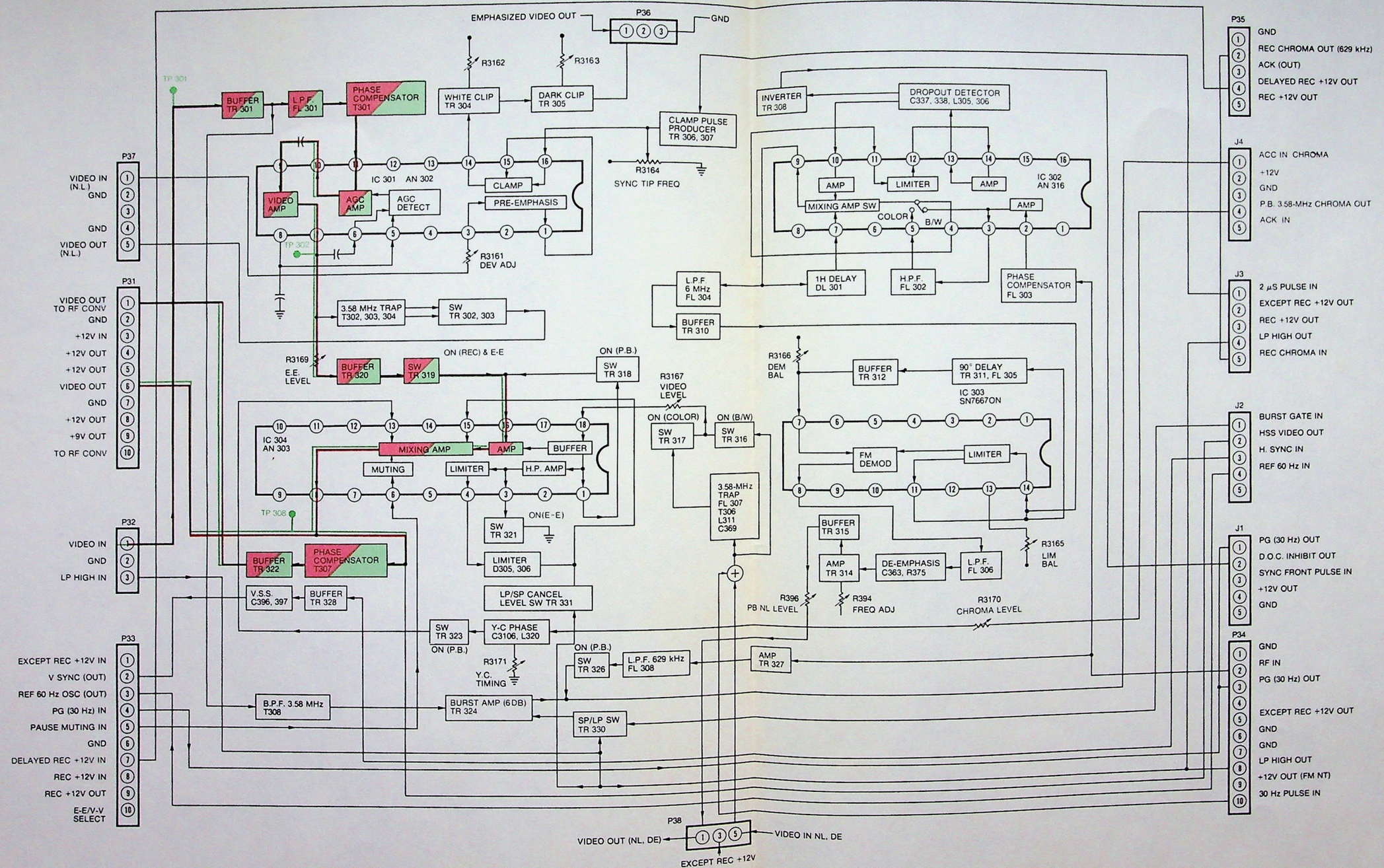

VCR-1

LUMINANCE PLAYBACK BLOCK DIAGRAM

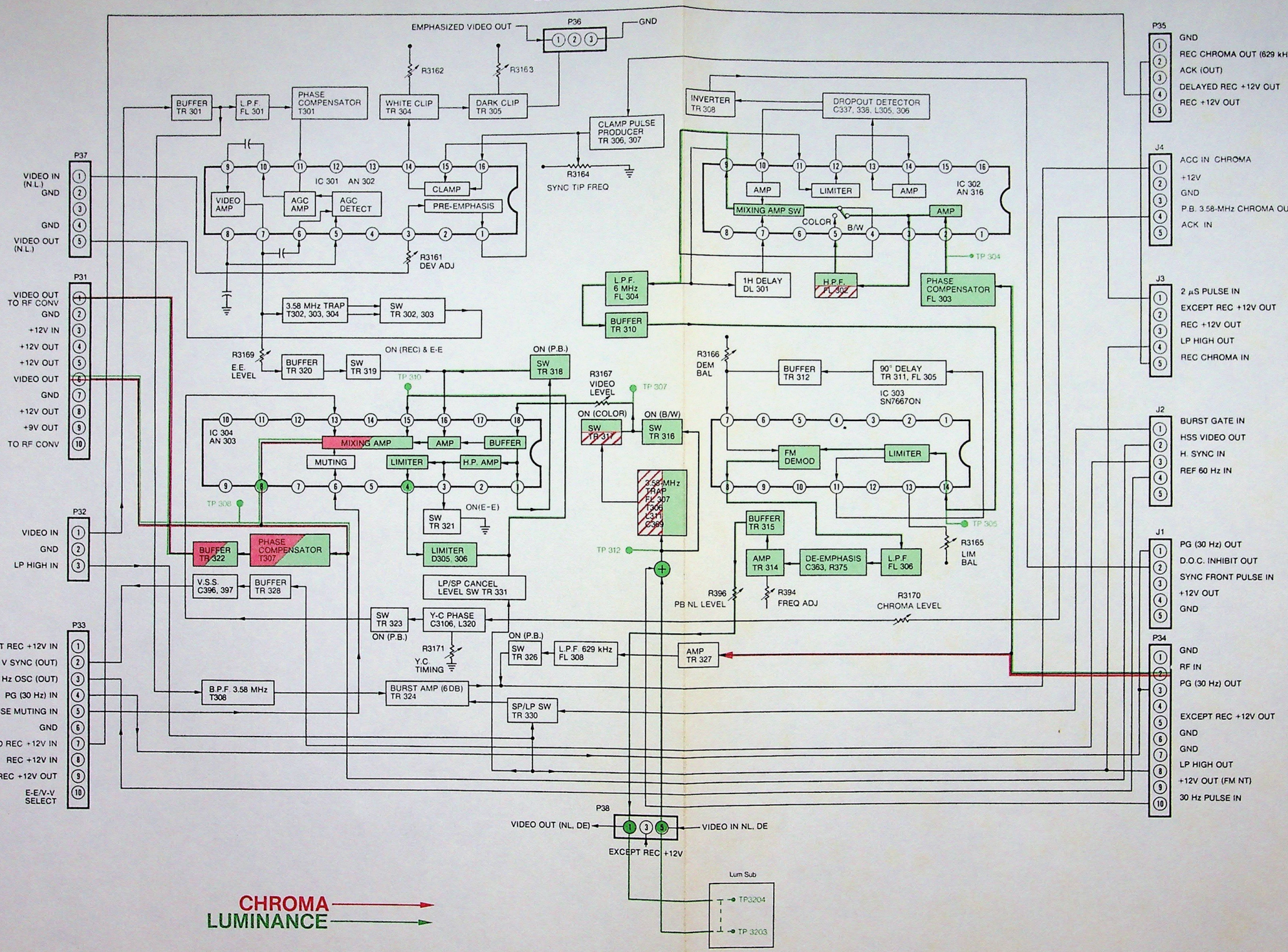

VCR-1

LUMINANCE RECORD BLOCK DIAGRAM

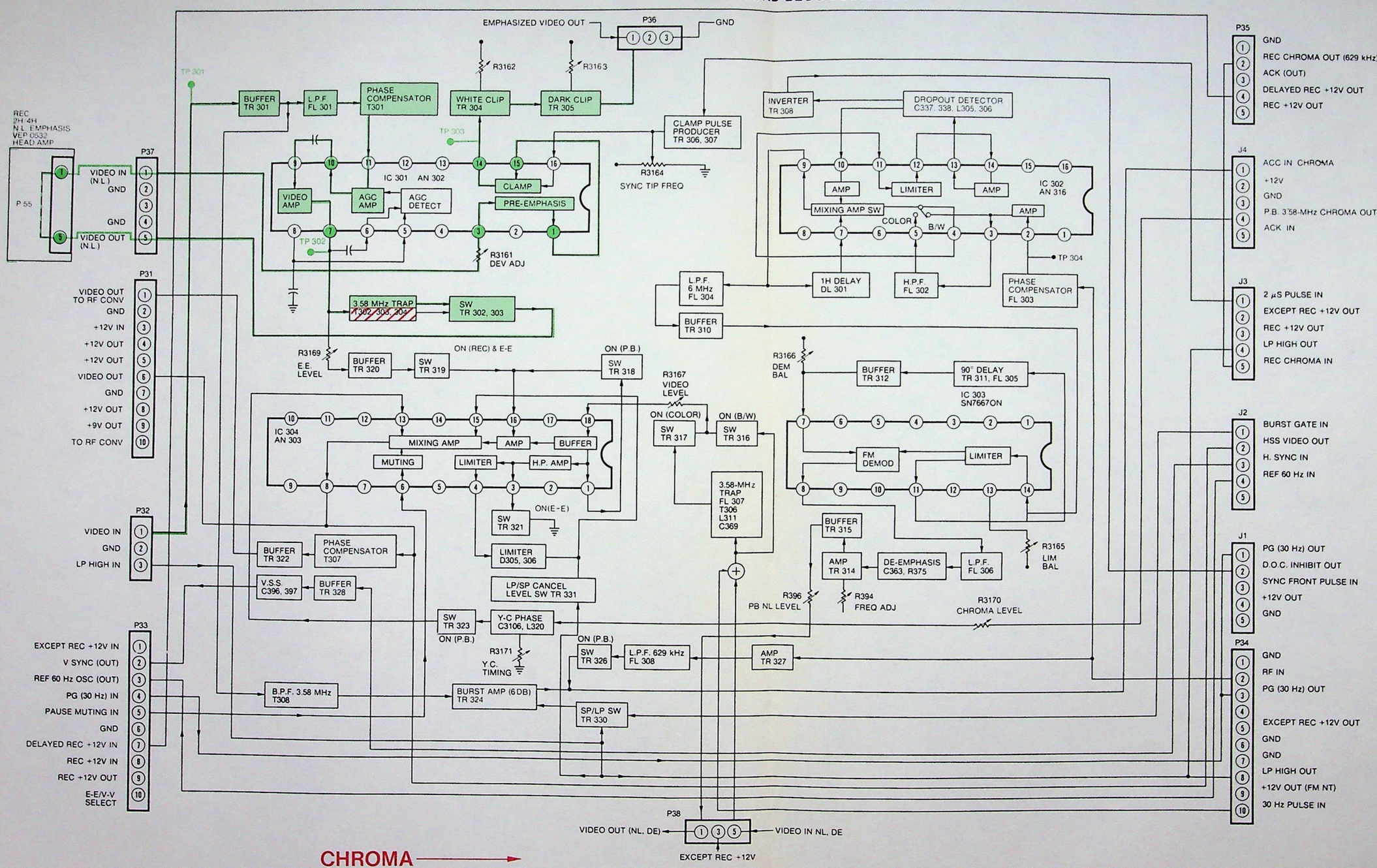

VCR-1

RECORD FM MODULATOR BLOCK DIAGRAM

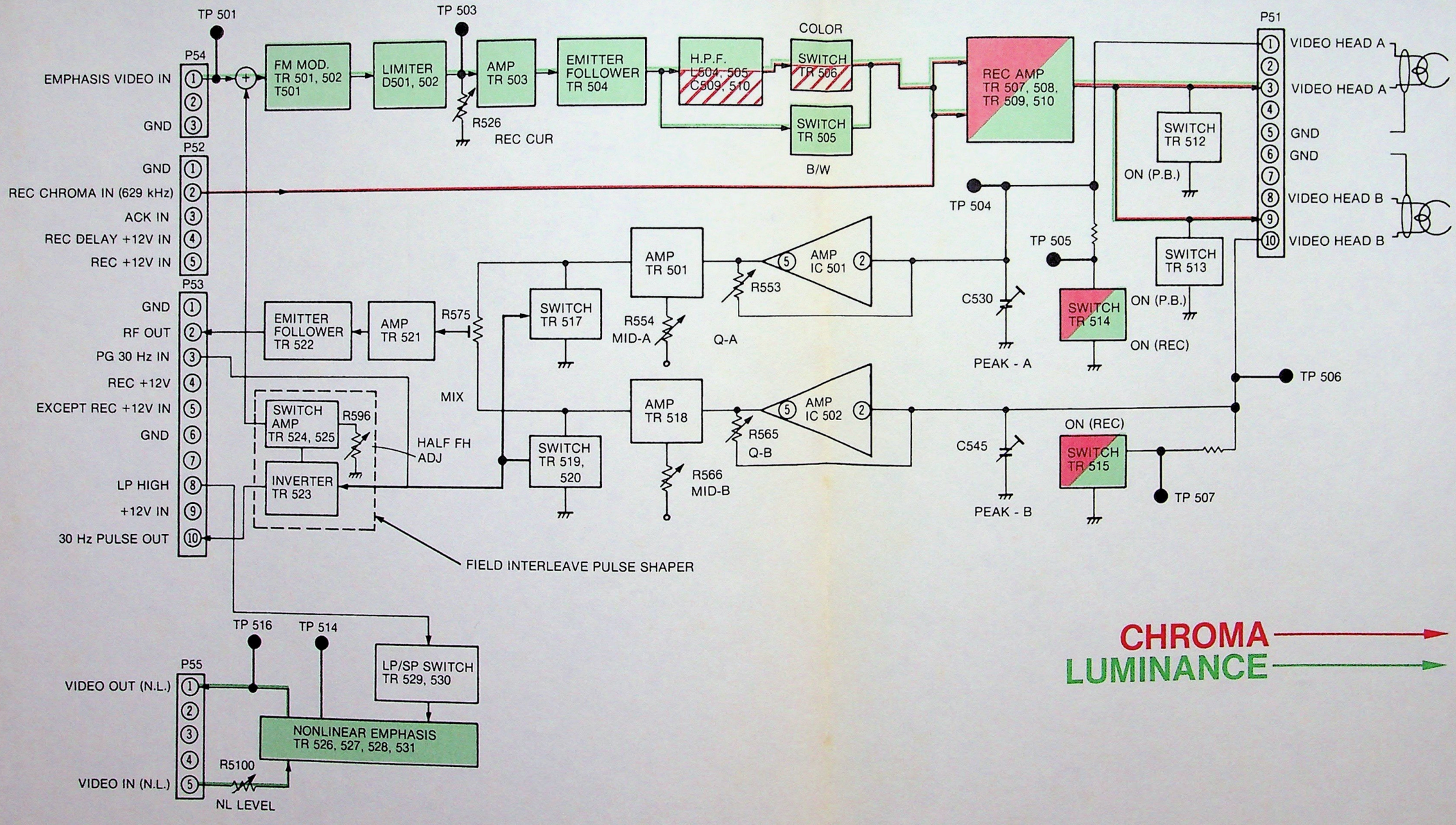

VCR-1

PLAYBACK HEAD AMPLIFIER BLOCK DIAGRAM

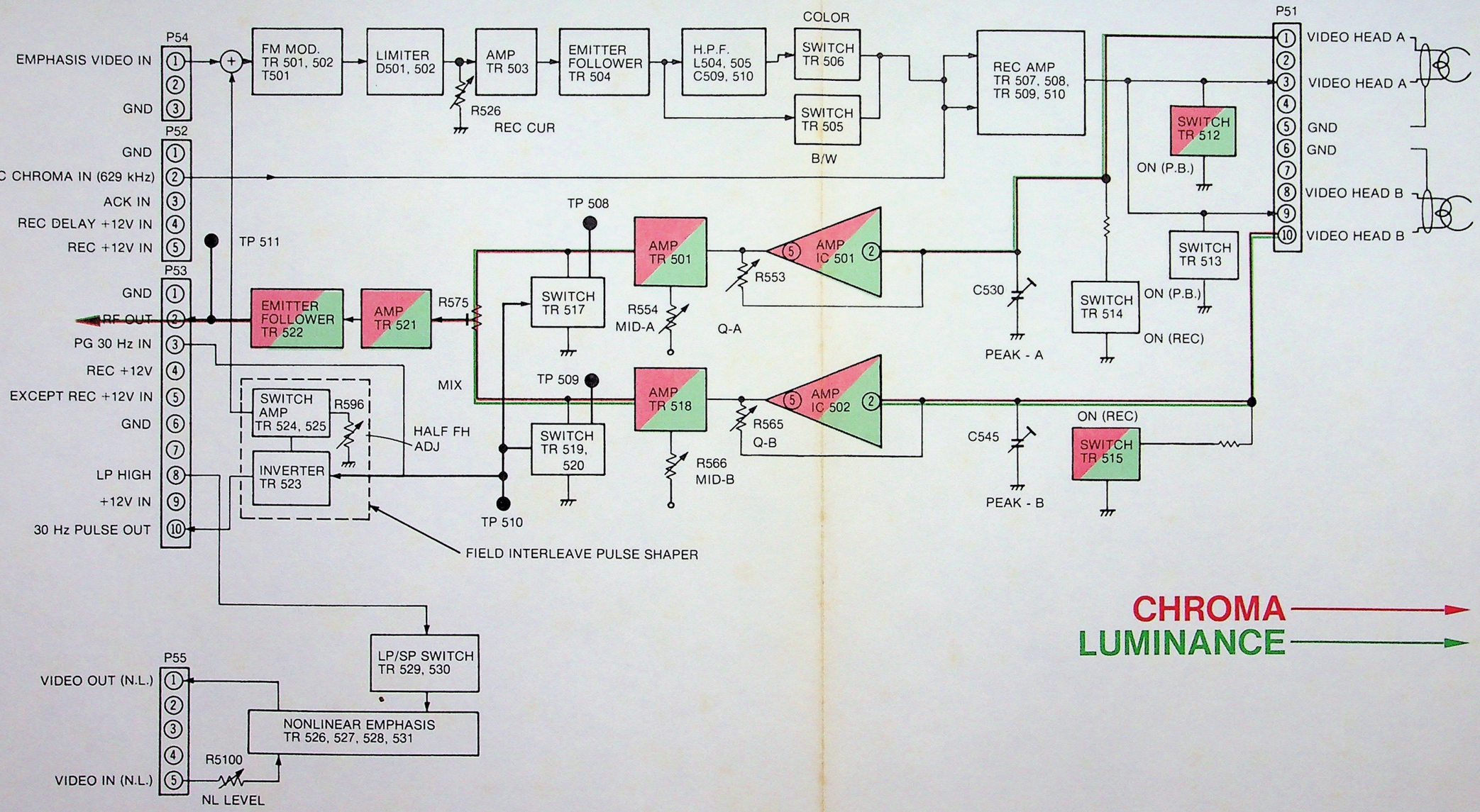

CHROMA →

LUMINANCE →

VCR-1

CHROMA RECORD BLO

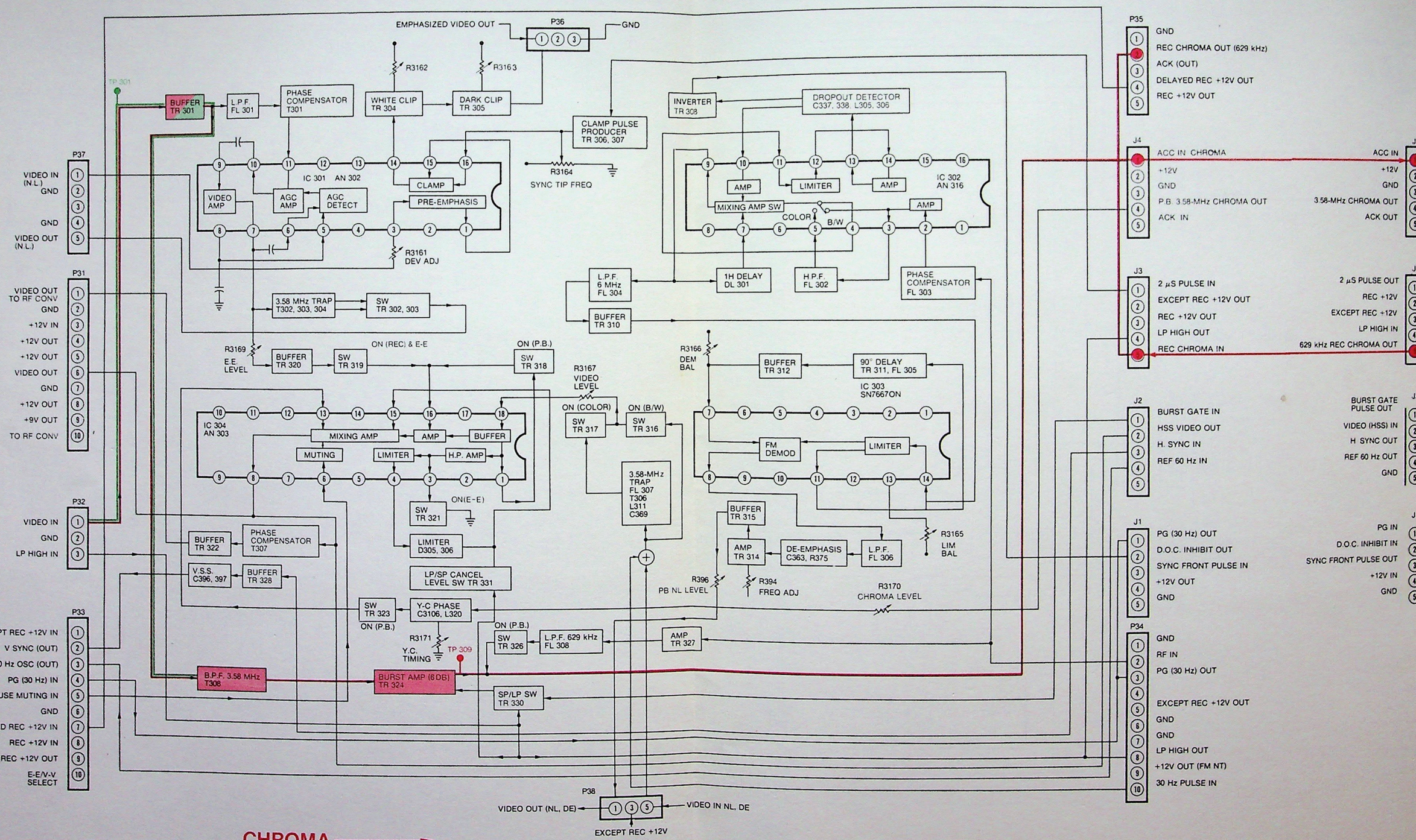

VCR-1

CK DIAGRAM

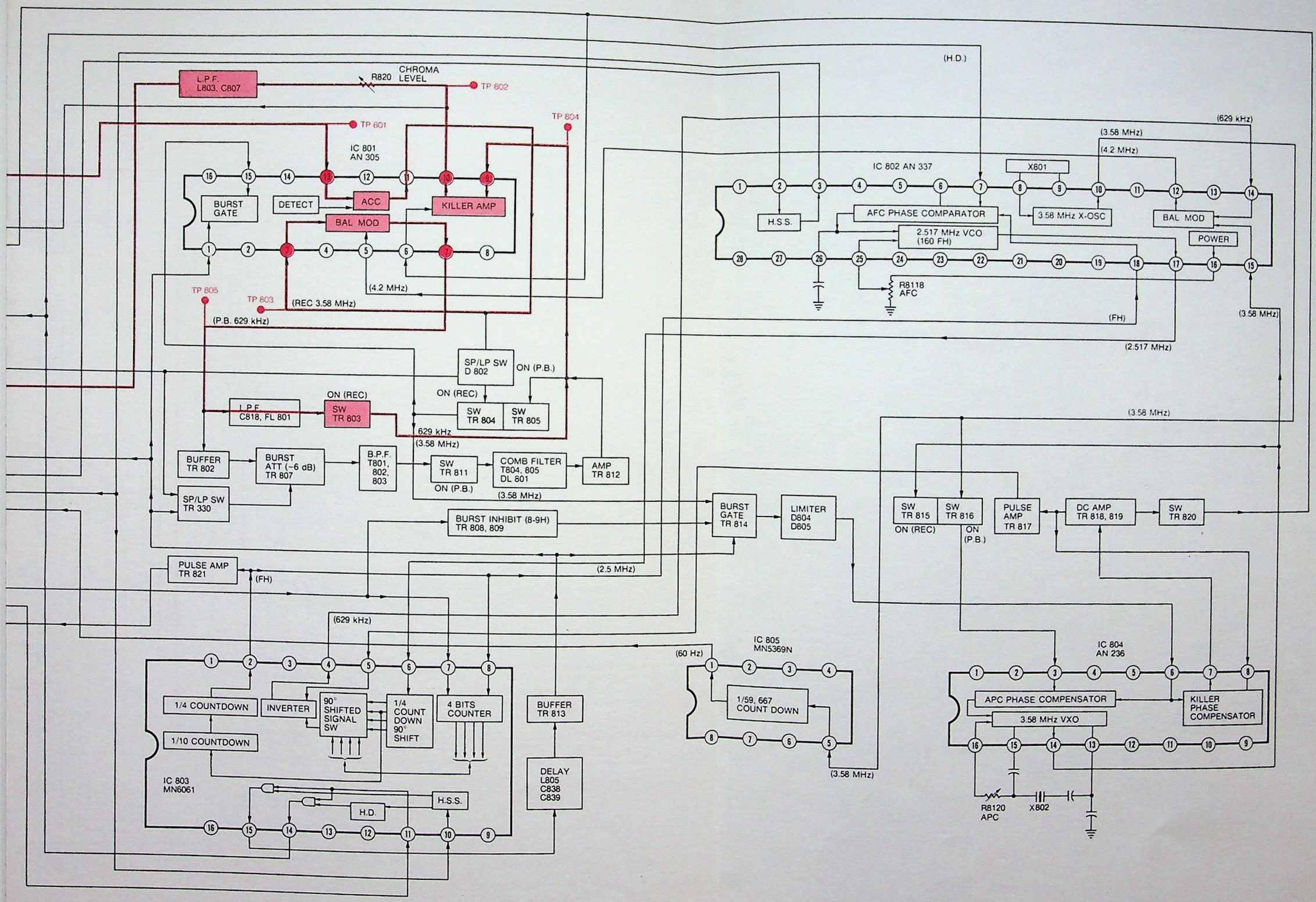

CHROMA PLAYBACK BLOCK DIAGRAM

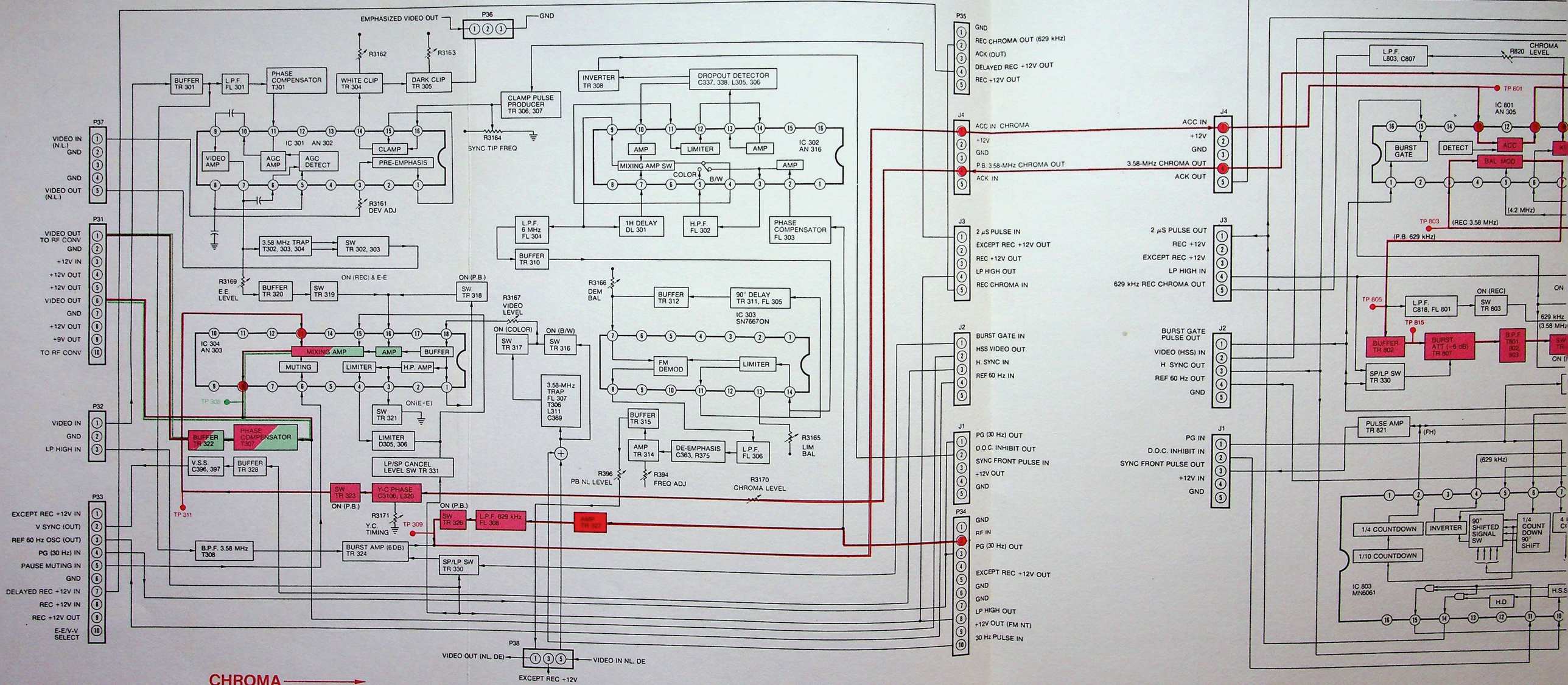

VCR-1

CHROMA PLAYBACK BLOCK DIAGRAM

P35
1 GND
2 REC CHROMA OUT (629 kHz)
3 ACK (OUT)
4 DELAYED REC +12V OUT
5 REC +12V OUT

J4
ACC IN CHROMA → ACC IN
+12V → +12V
GND → GND
P.B. 3.58-MHz CHROMA OUT → 3.58-MHz CHROMA OUT
ACK IN → ACK OUT

J3
2 μS PULSE IN → 2 μS PULSE OUT
EXCEPT REC +12V OUT → REC +12V
REC +12V OUT → EXCEPT REC +12V
LP HIGH OUT → LP HIGH IN
REC CHROMA IN → 629 kHz REC CHROMA OUT

J2
BURST GATE IN → BURST GATE PULSE OUT
HSS VIDEO OUT → VIDEO (HSS) IN
H. SYNC IN → H SYNC OUT
REF 60 Hz IN → REF 60 Hz OUT
GND → GND

J1
PG (30 Hz) OUT → PG IN
D.O.C. INHIBIT OUT → D.O.C. INHIBIT IN
SYNC FRONT PULSE IN → SYNC FRONT PULSE OUT
+12V OUT → +12V IN
GND → GND

P34
GND
RF IN
PG (30 Hz) OUT
EXCEPT REC +12V OUT
GND
GND
LP HIGH OUT
+12V OUT (FM NT)
30 Hz PULSE IN

L.P.F. L803, C807
CHROMA R820 LEVEL
TP 802
TP 804
TP 801
IC 801 AN 305
BURST GATE
DETECT
ACC
BAL MOD
KILLER AMP
(4.2 MHz)
TP 803
(REC 3.58 MHz)
(P.B. 629 kHz)
SP/LP SW D 802
ON (P.B.)
ON (REC)
TP 805
L.P.F. C818, FL 801
SW TR 803
SW TR 804
SW TR 805
629 kHz (3.58 MHz)
TP 815
TP816
BUFFER TR 802
BURST ATT (-6 dB) TR 807
B.P.F. T801, 802, 803
SW TR 811
ON (P.B.)
COMB FILTER T804, 805 DL 801
(3.58 MHz)
AMP TR 812
SP/LP SW TR 330
BURST INHIBIT (8-9H) TR 808, 809
PULSE AMP TR 821
(FH)
(2.5 MHz)
(629 kHz)
1/4 COUNTDOWN
1/10 COUNTDOWN
INVERTER
90° SHIFTED SIGNAL SW
1/4 COUNT DOWN 90° SHIFT
4 BITS COUNTER
IC 803 MN6061
H.D
H.S.S.
BUFFER TR 813
DELAY L805 C838 C839
BURST GATE TR 814
LIMITER D804 D805
(H.D.)
(629 kHz)
(3.58 MHz)
(4.2 MHz)
IC 802 AN 337
X601
H.S.S.
AFC PHASE COMPARATOR
3.58 MHz X-OSC
BAL MOD
2.517 MHz VCO (160 FH)
POWER
R8118 AFC
(FH)
(3.58 MHz)
(2.517 MHz)
(3.58 MHz)
SW TR 815
SW TR 816
ON (REC)
ON (P.B.)
PULSE AMP TR 817
DC AMP TR 818, 819
SW TR 820
IC 805 MN5369N
(60 Hz)
1/59, 667 COUNT DOWN
(3.58 MHz)
IC 804 AN 236
APC PHASE COMPENSATOR
3.58 MHz VXO
KILLER PHASE COMPENSATOR
R8120 APC
X802

VCR-1

CYLINDER SERVO BLOCK DIAGRAM

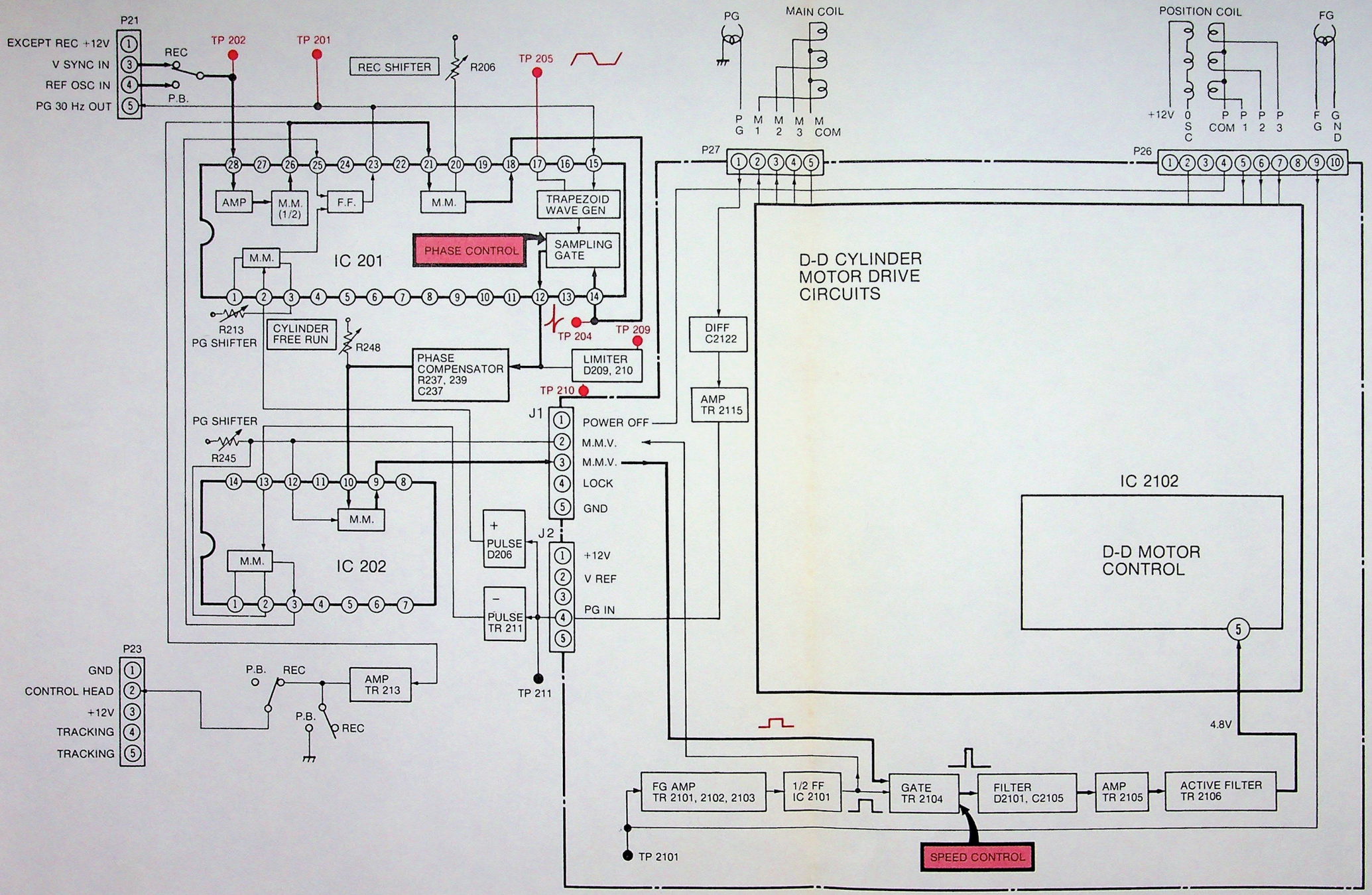

VCR-1

CAPSTAN SERVO BLOCK DIAGRAM

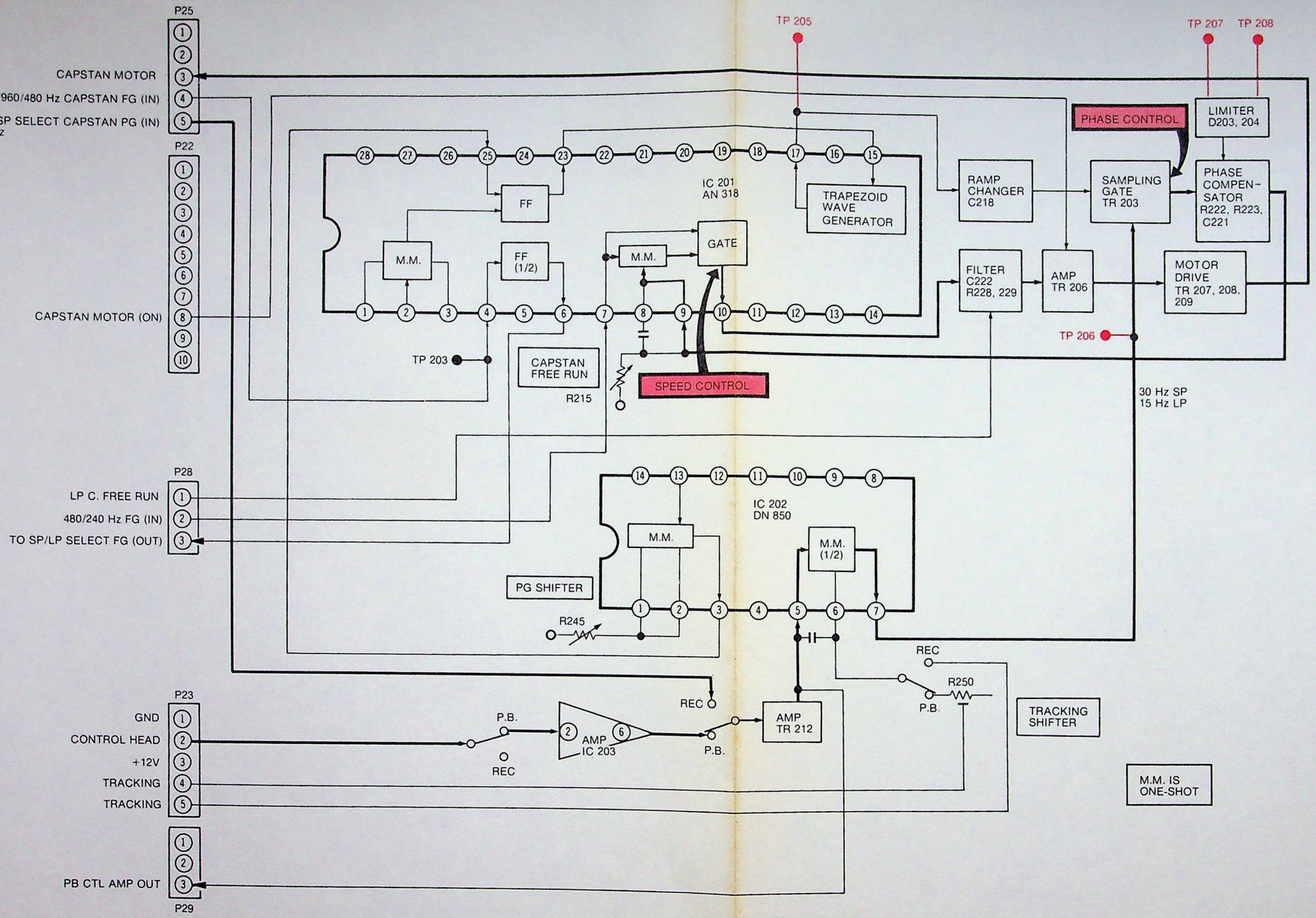

VCR-1

COLOR OSCILLATORS BLOCK DIAGRAM

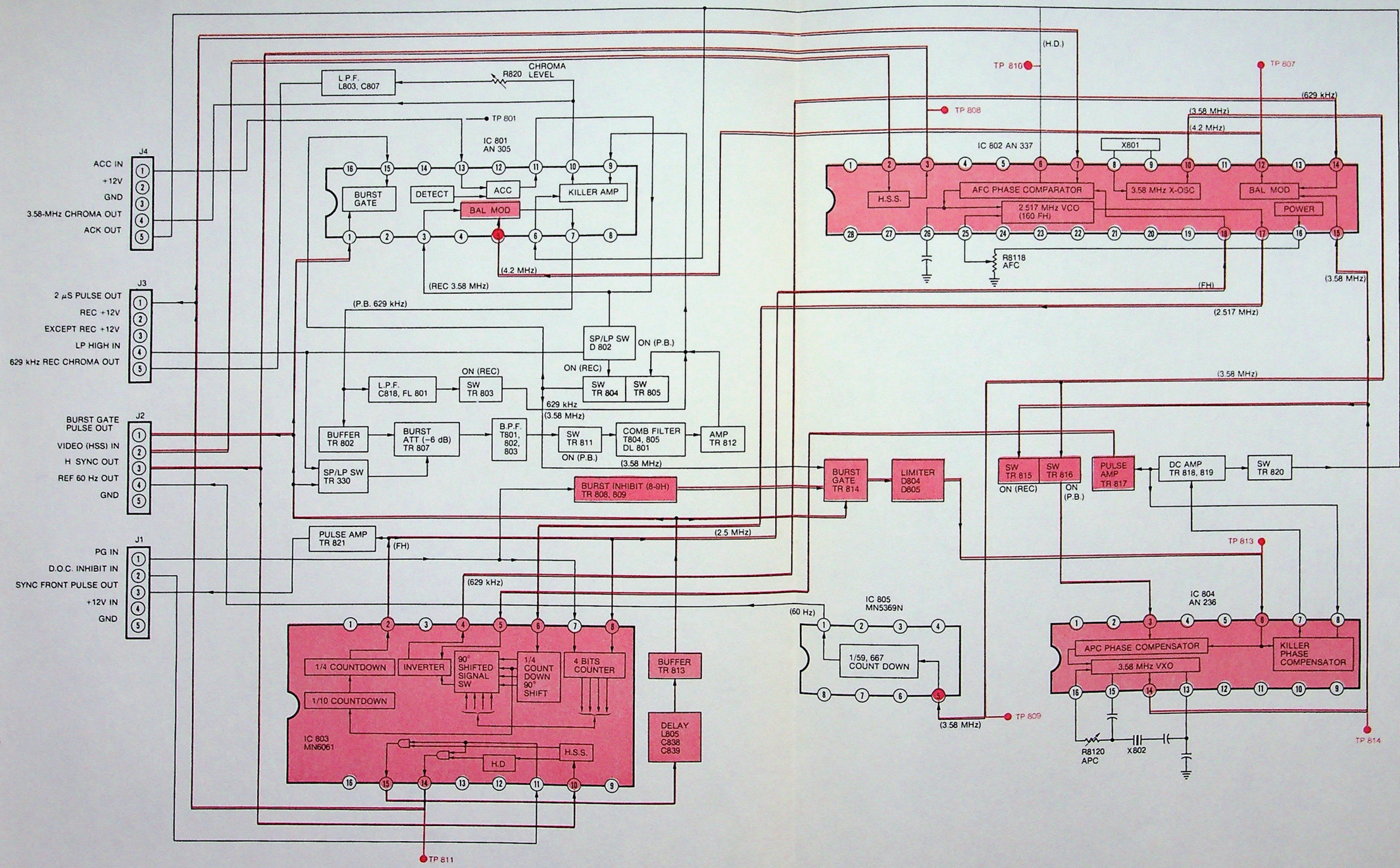

INSTRUMENT DISASSEMBLY

Note: Before beginning instrument disassembly it is important to realize that all screws and bolts are "**METRIC**". Disassembly should only be done using "**METRIC**" tools — screwdrivers are supplied in VCR Tool Kit.

Back panel — Remove five (5) screws (Figure 1). Removing 3 screws each from bottom PCB boards allows the boards to swing out to gain access to bottom of tape transport mechanism.

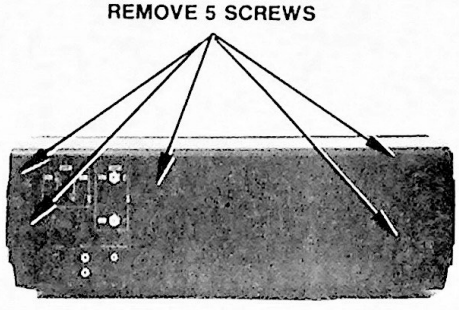

Figure 1. Back Panel Removal

Top panel — Remove tracking knob & four (4) screws (Figure 2).

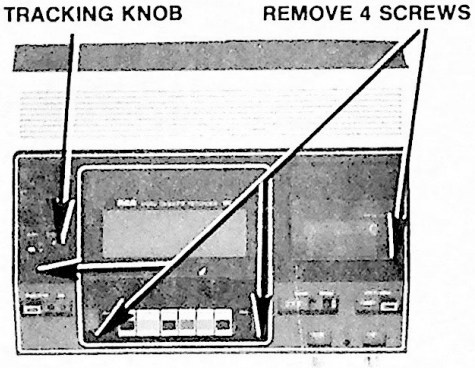

Figure 2. Top Panel Removal

Side panels — Remove two (2) screws from each panel (Figure 3).

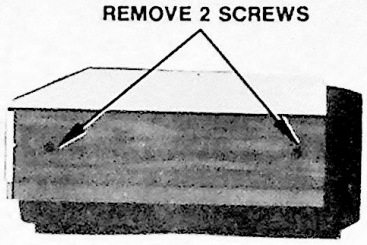

Figure 3. Side Panel Removal

Bottom panel — Remove six (6) screws (Figure 4).

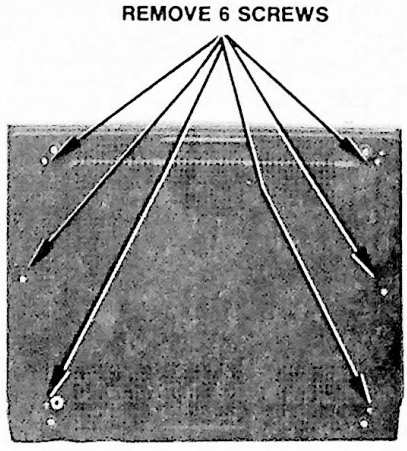

Figure 4. Bottom Panel Removal

Front panel — Remove VHF CHANNEL knob, VHF FINE TUNING knob UHF CHANNEL knob, UHF FINE TUNING knob, two (2) screws from each side and loosen two (2) screws on top (Figure 5).

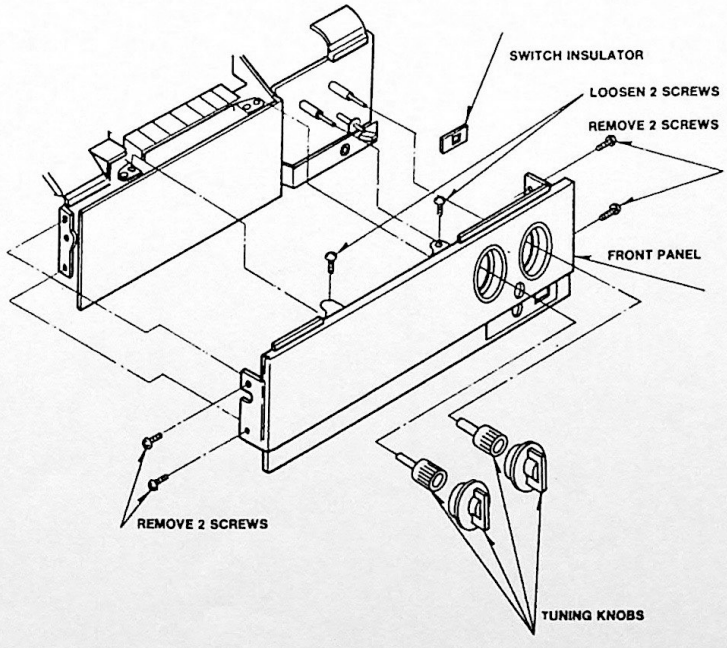

Figure 5. Front Panel Removal

TAPE TRANSPORT PARTS IDENTIFICATION

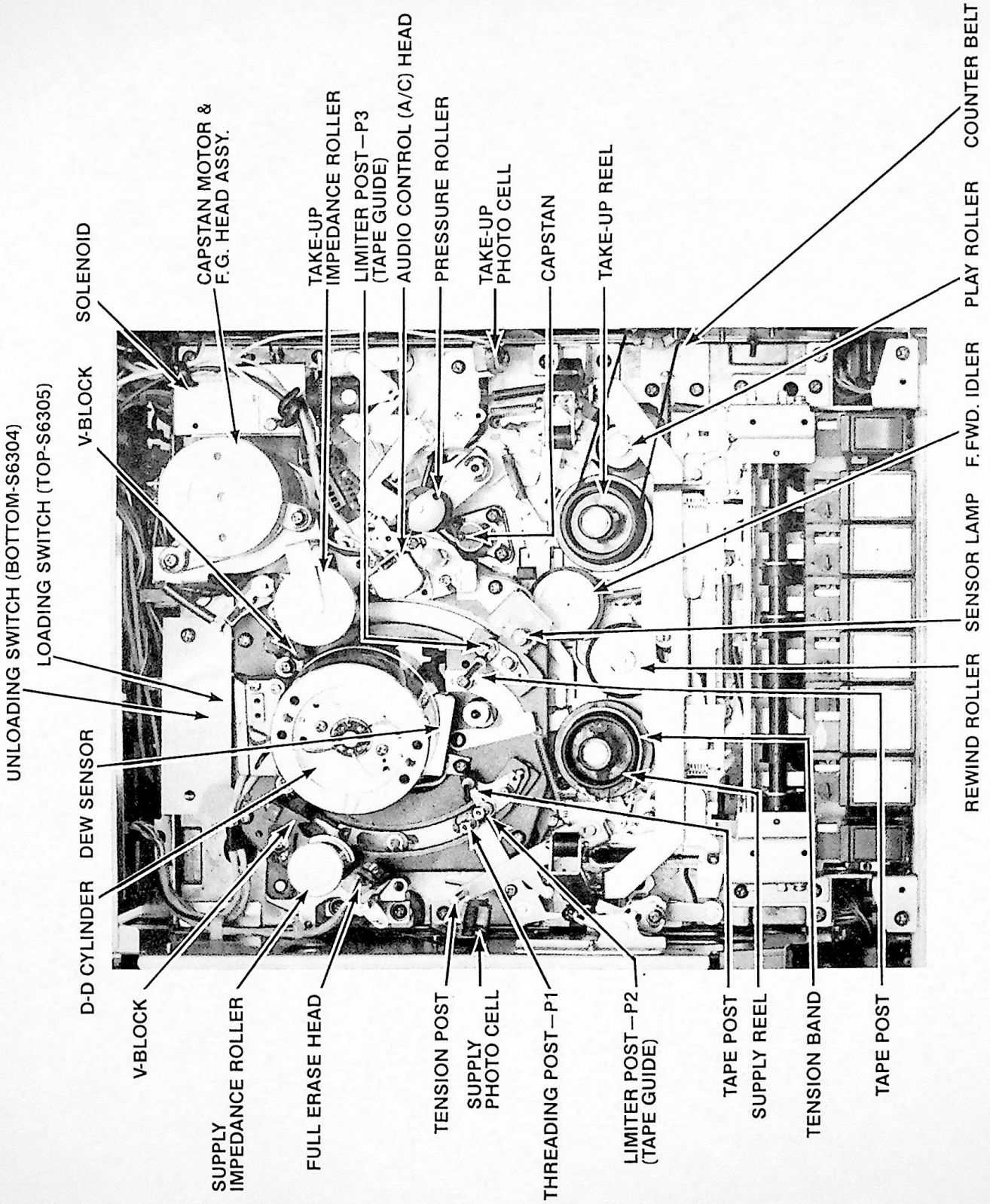

Figure 6. Top View Of Tape Transport Mechanism

TAPE TRANSPORT PARTS IDENTIFICATION

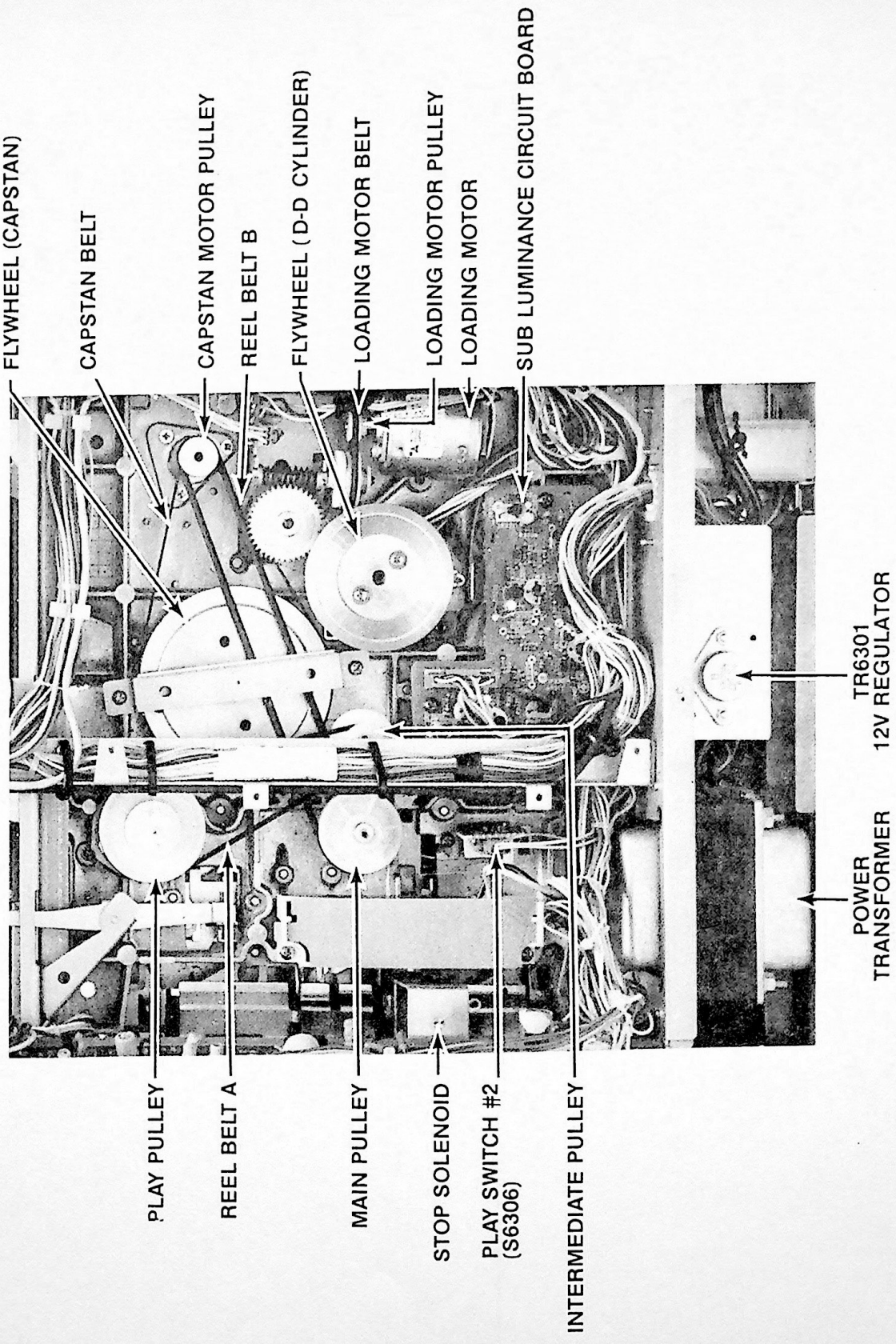

Figure 7. Bottom View Of Tape Transport Mechanism

MECHANICAL DISASSEMBLY

Video Head (Upper Cylinder) Removal

Use extreme care when removing or replacing the upper cylinder. **Do not touch** either video head (located in base of upper cylinder) during servicing.

To remove the upper cylinder perform the following steps:

1. Unsolder the four (4) leads as shown in Figure 8 — wires are color coded to match leads from rotary transformer which is part of the D-D cylinder.
2. Remove two retaining screws from the top of the upper cylinder.
3. Very gently lift the upper cylinder from the D-D cylinder main shaft. **Do not touch** the video heads.
4. Before replacing or reinstalling the upper cylinder, clean the D-D cylinder shaft and the inside of the upper cylinder with a "Kimwipe" and solvent (Stock No. 144592).

Note: The upper cylinder is a snug fit on D-D motor shaft. If the shaft and the mating surface of the upper cylinder are clean and properly aligned, the upper cylinder will slide on the shaft without exerting undue pressure.

5. After replacing the upper cylinder, use "Kimwipes" and solvent (Stock No. 144592) to clean the surface of the upper cylinder — exercise care not to touch the video heads. See "Cleaning Tape Mechanism" on Page 1-8 for proper video head cleaning procedure.

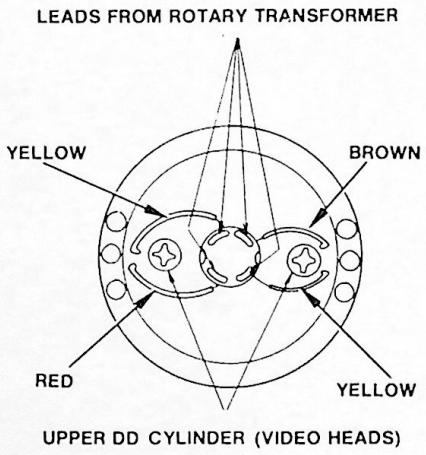

Figure 8. Upper Cylinder Removal

D-D Motor (Lower Cylinder) Removal

Before removing the D-D motor, remove the upper cylinder containing the video heads. (See "Video Head Removal" above.)

1. Unplug connector P51 from the FM Modulator Record and Head-Amp Board. Remove the nylon tie holding this cable to chassis.
2. Remove the two (2) screws securing the flywheel to the bottom of the D-D motor.
3. Unplug connectors P26 and P27 from Cylinder Motor Drive board.
4. Pay particular attention to how these wires are routed along the chassis so that proper lead dress can be restored when unit is reassembled. Remove the nylon wire ties holding these wires.
5. Remove three (3) screws from the bottom of the D-D motor and carefully lift the motor out through the top of the instrument.

Note: When replacing the D-D motor, **do not** reinstall the upper cylinder (video heads) until after the D-D motor has been installed and all cabling is properly routed.

Timer Removal

1. Open timer lid and remove two (2) screws.
2. Lift timer "up" and disconnect plug from bottom of timer.
3. To gain access to timer circuit board, remove four (4) screws from bottom of timer. The circuit board may now be removed for service.

Cassette Holder Removal

The cassette holder top cover must first be removed by removing two (2) screws from each side.

1. Remove two (2) screws holding the plastic cassette guide.
2. Remove four (4) screws from front of cassette holder assembly. Press and hold down EJECT button and carefully lift cassette holder out of instrument (Figure 9).

Note: See "Mechanical Adjustments," Page 3-7 for proper replacement procedure.

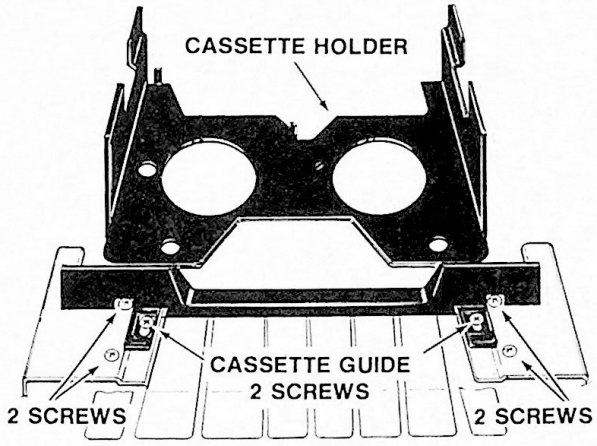

Figure 9. Cassette Holder Removal

Cassette Holder Support Roller Block and Lock Arms Removal

1. Remove counter belt from take-up turntable and secure belt so it does not fall off counter-drive pulley.
2. Remove four (4) mounting screws — see assembly in Figure 10.

Note: See "Mechanical Adjustments," Page 3-6 for proper replacement procedure.

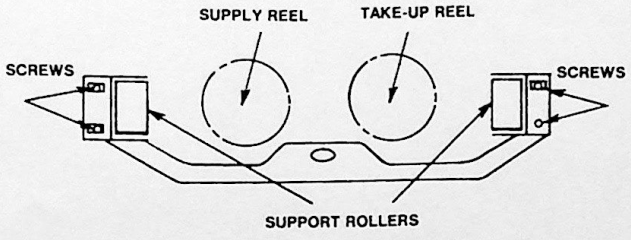

Figure 10. Cassette Holder Support Removal

MECHANICAL DISASSEMBLY (continued)

Back Tension Band and Back Tension Arm Base Removal

See Figure 11 for the proper placement of parts.

1. Remove top grip ring.
2. Remove tension arm spring.
3. Remove screw holding tension band.
4. Carefully remove tension arm, tension arm band, and then remove grip ring from bottom of tension band.
5. Remove set screw holding tension arm base.
6. Remove subtension arm spring.
7. Remove grip ring from top of subtension arm.

Note: See "Mechanical Adjustments," Page 3-3 for proper adjustment procedure after reassembly.

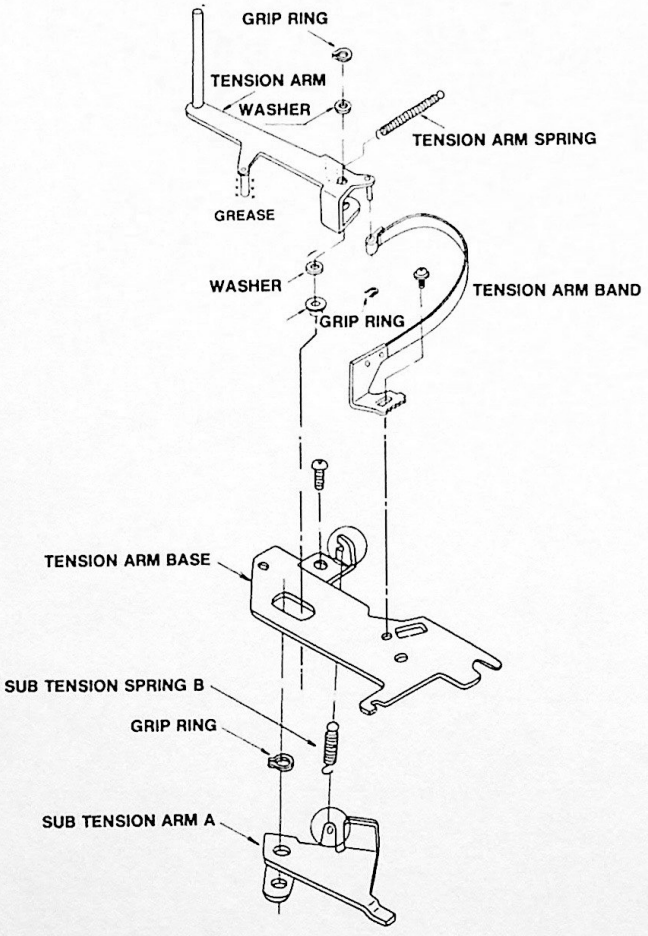

Figure 11. Back Tension and Back Tension Arm Base Removal

Pressure Roller Removal

1. Use a 1.5-mm hex wrench to remove set screw from thrust boss located at the top of the pressure roller (Figure 12).
2. When replacing the thrust boss, align the set screw with the middle of the pressure roller arm.

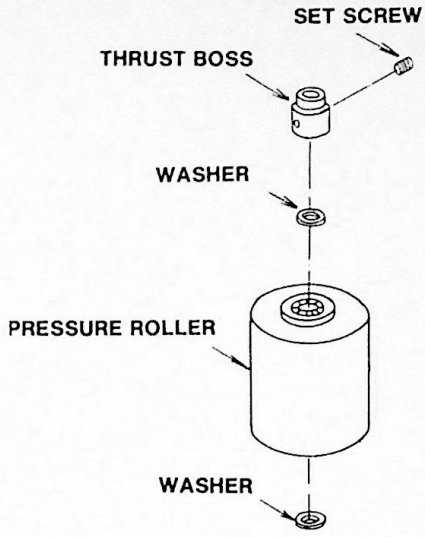

Figure 12. Pressure Roller Removal

Play Pulley and Subtension Arm Removal

See Figure 13 for proper placement of parts.

1. Remove play-pulley stopper from bottom of play-pulley arm and remove play pulley.
2. Remove spring from subtension arm.
3. Remove grip ring from top of subtension arm and remove the subtension arm.
4. Remove play-arm spring and remove play arm.

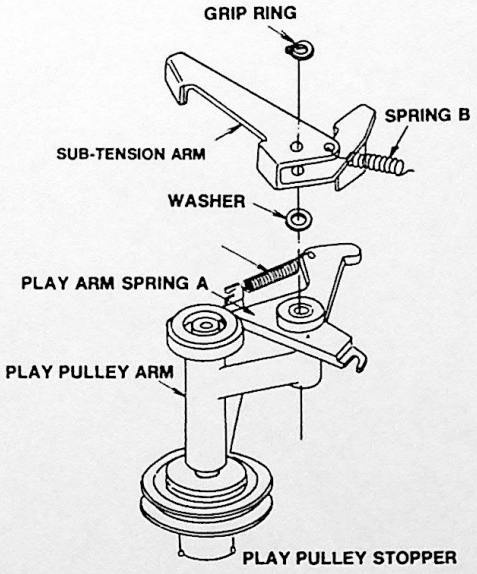

Figure 13. Play Pulley And Sub-Tension Arm Removal

MECHANICAL DISASSEMBLY (continued)

Supply Reel and Takeup Brake Removal

1. Before removing the brake assembly, it is necessary to remove the cassette holder support roller block and lock-arm assembly — see Page 2-4.
2. Removing one grip ring from each side allows the entire brake assembly to be removed — see Figure 14.

Note: See "Mechanical Adjustments," Page 3-5 for brake adjustment procedure.

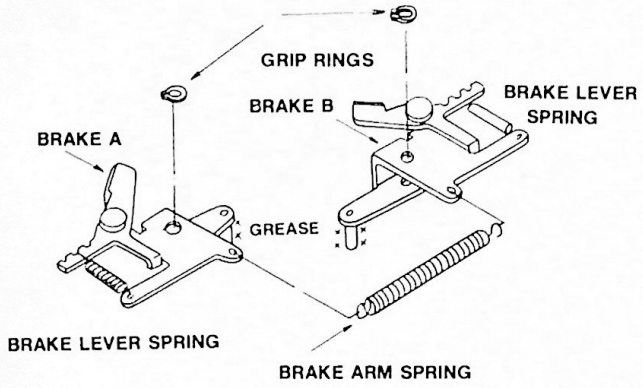

Figure 14. Supply Reel and Takeup Brake Removal

Rewind Roller Removal

See Figure 15 for proper placement of parts.

1. Remove spring attached to rewind arm.
2. Using a 1.5-mm hex wrench, remove screw from top of rewind roller.
3. Remove grip ring from top of rewind arm.
4. Remove rewind arm from main pulley shaft — be careful not to lose the top and bottom washers.

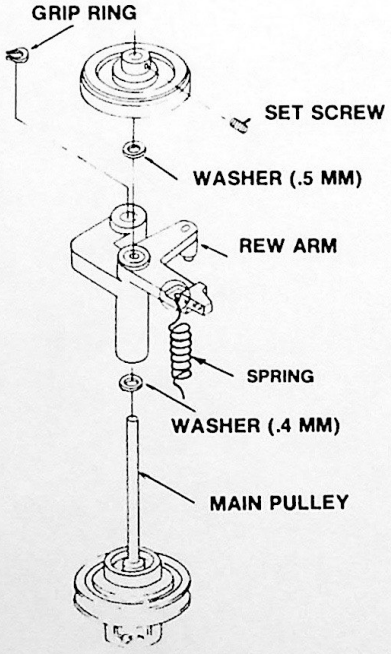

Figure 15. Rewind Roller Removal

Fast Forward Idler Removal

Remove grip ring from top of idler — be careful not to lose the top and bottom washers.

Supply Reel and Takeup Reel Removal

Before removing the supply reel, it will be necessary to remove the back tension band and back tension arm base — see Page 2-5. For removal of either reel, it is necessary to remove the grip ring at the top of each reel as shown in Figure 16. It is important that the stack of plastic washers under each turntable be reinstalled exactly as removed.

Note: Pay particular attention to the washer and thrust bearing located under each reel as they determine the proper turntable height. See "Mechanical Adjustments," Page 3-3 for proper washer replacement procedure if turntable is replaced or washer-stack is disturbed.

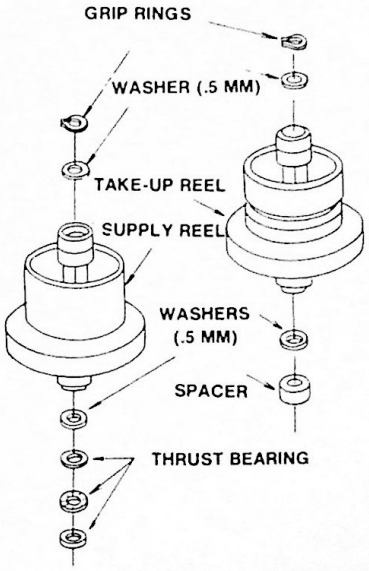

Figure 16. Supply Reel And Takeup Reel Removal

Loading Motor Removal

See Figure 17 for the proper placement of parts.

1. Unsolder the two (2) leads connected to the end of the loading motor.
2. Using a 2-mm hex wrench, remove three (3) hex screws from the bracket holding the loading motor.

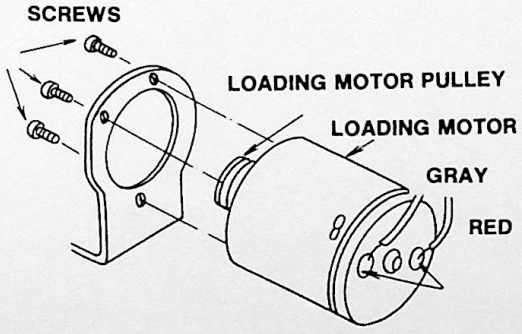

Figure 17. Loading Motor Removal

MECHANICAL DISASSEMBLY (continued)

Capstan Motor Removal

1. Unplug P605 from capstan motor circuit board.
2. Remove two (2) belts from capstan motor pulley.
3. Remove spring from take-up impedance-roller arm.
4. Remove three (3) screws from capstan motor base plate.
5. Carefully remove capstan-motor assembly from top of instrument.

Audio/Control Head (A/C) Removal

Unsolder shielded cable (two wires) from circuit board. Remove two positioning screws (Figure 18), audio head, cabling, and connector P612. It is not necessary to remove the base plate. See "Mechanical Adjustments," Page 3-11 for proper replacement procedure.

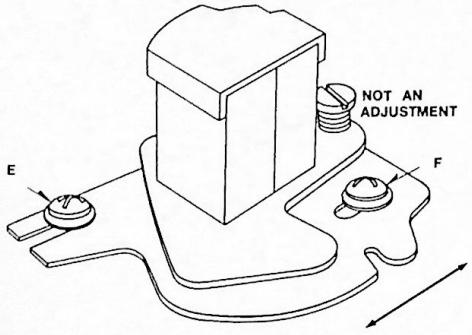

Figure 18. Audio And Control Head A/C Removal

Full Erase Head Removal

1. Unsolder two (2) leads from the erase head — see Figure 19.
2. Remove supply impedance-roller spring.
3. Remove grip ring from top of bracket holding impedance roller.
4. Remove two (2) screws holding bracket.
5. Remove two (2) screws from bottom of erase head.

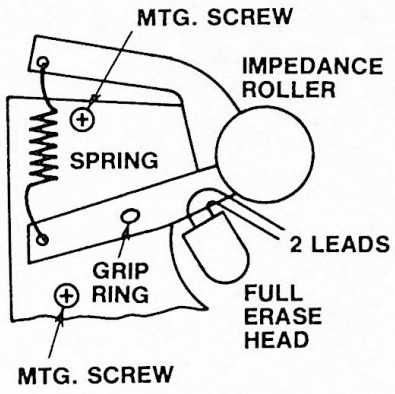

Figure 19. Full Erase Head Removal

MECHANICAL ADJUSTMENTS

RCA

Video Cassette Recorder VHS

Model VBT200

Service Data

Mechanical Adjustments Section

MECHANICAL ADJUSTMENTS — CONTENTS

Angle Posts 3-10,11
Audio and Control Head (A/C Position) 3-11
Audio/Control Head Height/Azimuth 3-11
Back Tension 3-8
Back Tension Band 3-3,4
Belt Replacement 3-8
Brake Torque Confirmation/Adjustment 3-5,6
Capstan Adjust Plate 3-2
Capstan Position 3-7
Cassette Lock-Arm Jig 3-2
Cassette Holder 3-7
Cassette Holder Jig 3-2
Cassette Lock-Arm Assembly 3-6,7
Cassette Support Height 3-3
Creasing or Slack Tape 3-11
Eject Lever 3-7
FM Mix (Head Balance) 3-11
Height Reference Gauge and Holder 3-2
Height Reference Plate 3-2
Interchangeability Confirmation 3-9,10
Mechanical Interchangeability Consideration 3-9
Play, Fast Forward, Rewind Torque Confirmation 3-6
Play Switch No. 2 3-4,5
Pressure Roller and Solenoid Spring Hook Lever 3-4,5
P2 and P3 Tape Guides 3-10
Reel Table Height 3-3
Rough Tape Travel 3-9
Screwdriver — Tape Guide Adjust 3-3
Screwdriver — Tension Adjust 3-3
Tape Guide Post Height 3-4,5
Tape Speed Confirmation 3-8,9
Screwdriver — Tape Transport Adjust 3-2
Tape Transport (Top View) 3-1
Threading Post Position 3-3,4
Torque Gauge — Model 600 ATG 3-2
Torque Gauge — Model 651 C-2 3-2
Turntable Brakes and Drive Clutches 3-5
V Stopper Blocks 3-4

MECHANICAL ADJUSTMENTS

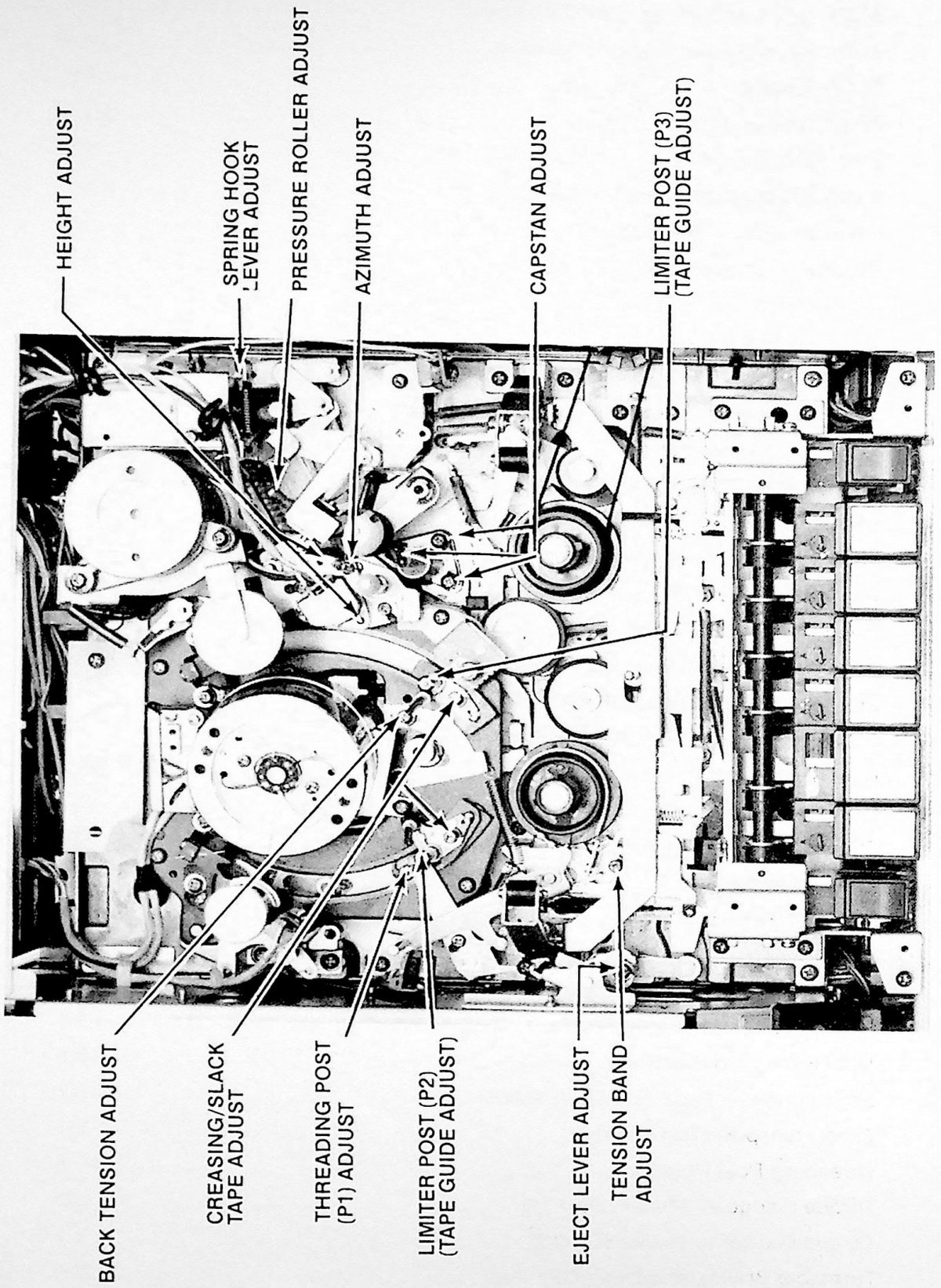

Figure 1. Tape Transport (Top View)

MECHANICAL ADJUSTMENTS (continued)

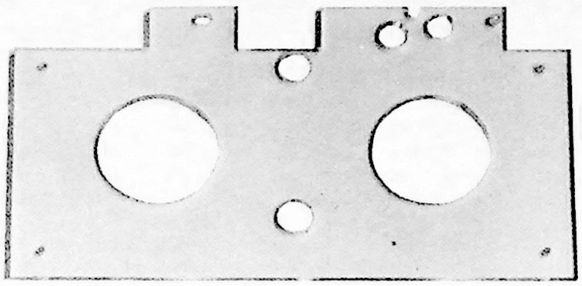

Figure 2. Capstan Adjust Plate (Part No. 144393)

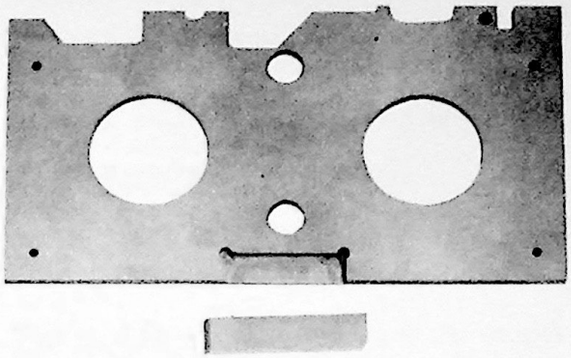

Figure 6. Height Reference Plate (Part No. 144390, 144609)

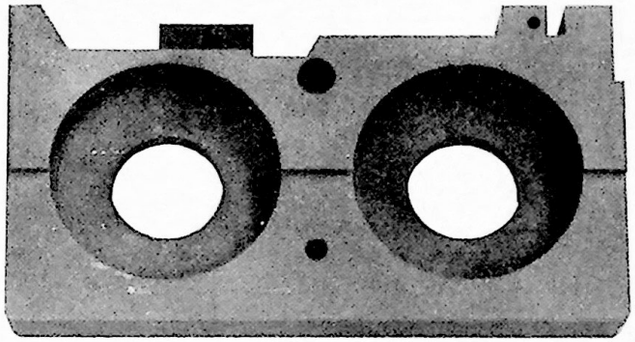

Figure 3. Cassette Holder Jig (Part No. 144394)



Figure 7. Height Reference Gauge and Holder (Part No. 144391, 144608)

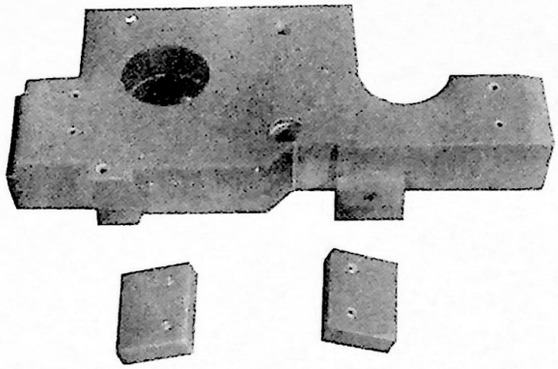

Figure 4. Cassette Lock-Arm Jig (Part No. 144392, 144607)

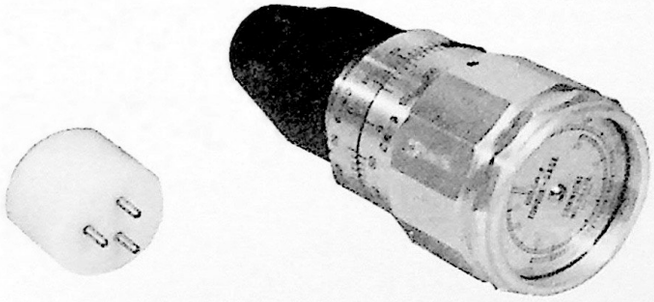

Figure 8. Model 600ATG Torque Gauge (Part No. 144396, 144386)

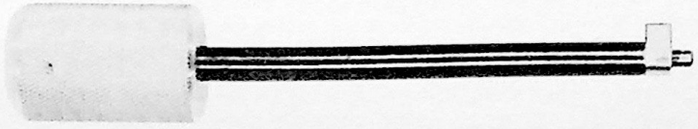

Figure 5. Screwdriver — Tape Transport Adjust (Part No. 144387)

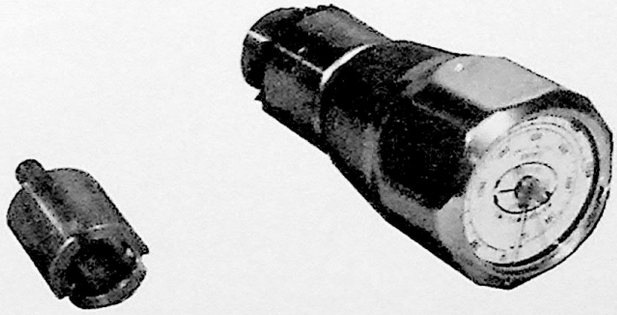

Figure 9. Model 651C-2 Torque Gauge (Part No. 144396, 144600)

MECHANICAL ADJUSTMENTS (continued)



Figure 10. Screwdriver — Tension Adjust (Part No. 144388)

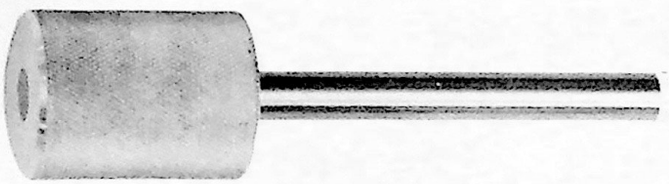

Figure 11. Screwdriver — Tape Guide Adjust (Part No. 144389)

Cassette Support Height

The cassette holder assembly must be removed before performing this adjustment — see Page 2-4.

1. Install Height Reference Plate (Stock No. 144390) on the four (4) supports — see Figure 12.
2. Loosen set screw A and adjust front support (located in front of the D-D Cylinder) to just contact reference plate.
3. Tighten set screw.

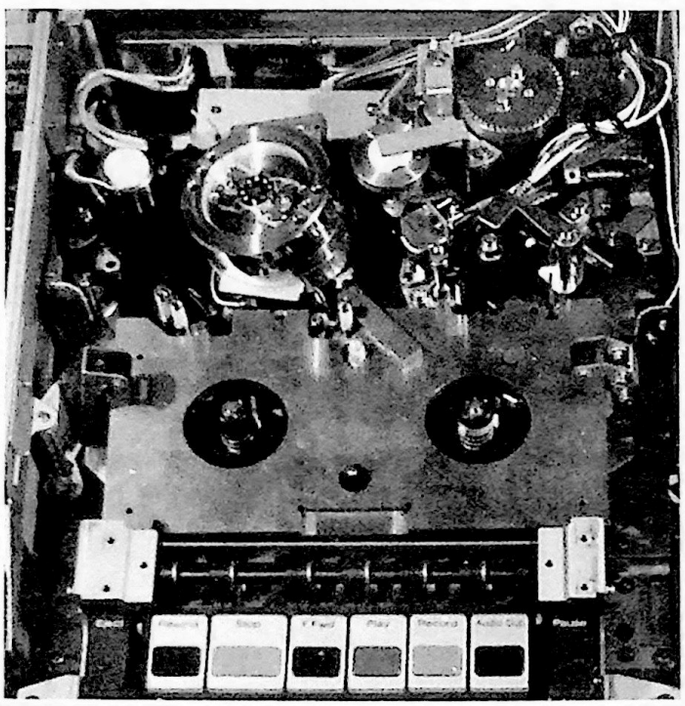

Figure 12. Use of Height Reference Plate

Reel Table Heights

The height of the supply and take-up reel turntables should be the same ±0.1-mm tolerance. Turntable heights are adjusted by changing the washer stack located under each turntable — see Page 2-6, Figure 16.

Check turntable heights by installing the Height Reference Plate (Stock No. 144390). Set the Reel Table Height Jig (Stock No. 144391) in place per Figure 13 and adjust it to zero. Now move the jig so that the sensor arm rests on top of the supply turntable and note the reading. Now move the jig to the top of the take-up turntable. The difference in readings should be less than 0.1 mm.

Three sizes of washers are available, .13 mm (Stock No. 144491), .25 mm (Stock No. 144490), and .5 mm (Stock No. 144302). These should be used in combination to achieve equal reference heights for both turntables.

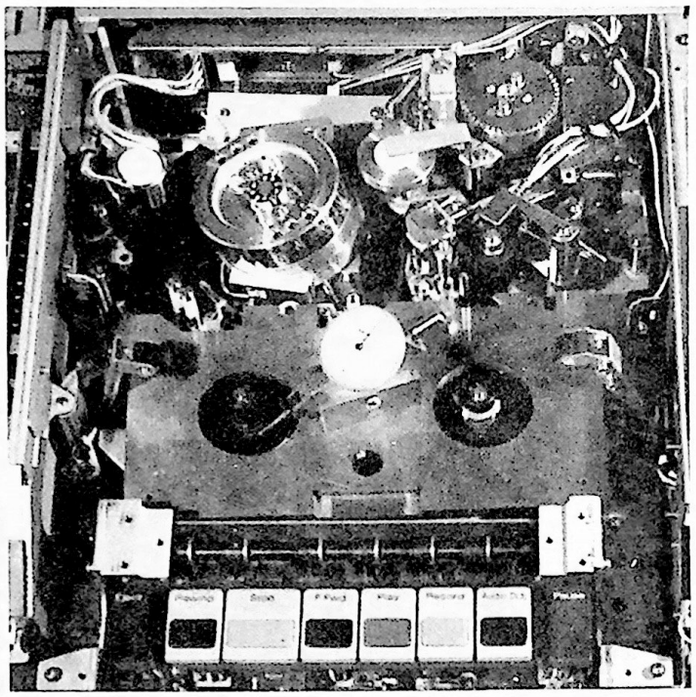

Figure 13. Use of Height Reference Gauge and Holder

Back Tension Band

The cassette holder assembly must be removed before performing this adjustment.

1. Short TP 609 (Regulator and Transport Board) to ground.
2. Place the instrument in "Play" with no tape in machine. After loading operation is completed, turn AC power "off" and press the PLAY button again
3. Loosen screw "A" as shown in Figure 14.
4. Insert Tension Adjust Screwdriver (Stock No. 144388) in hole "B" and carefully adjust the distance from the tension post to the center of the cassette support post — correct setting is 62.3 ± .5 mm.

Threading Post Position

With the instrument in "Play" position (see Steps 1 and 2 above), loosen threading arm adjustment screw "A" and set distance from the center of the cassette support post to the threading post at 79.7 ±.5mm. Tighten screw. For details see Figure 15.

MECHANICAL ADJUSTMENTS (continued)

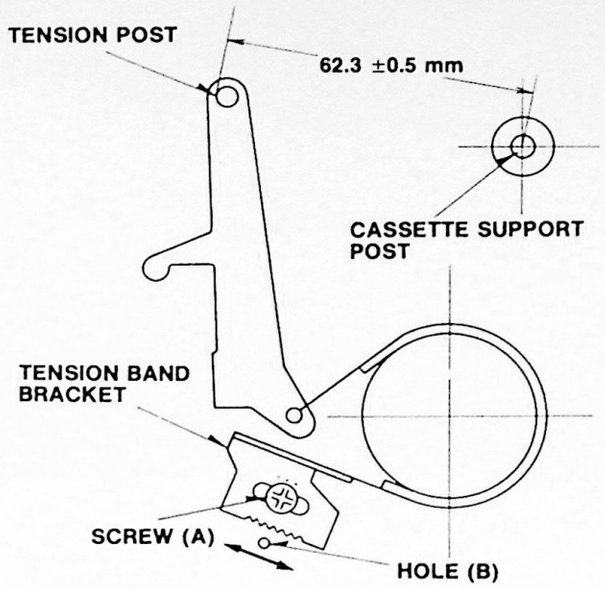

Figure 14. Back Tension Band

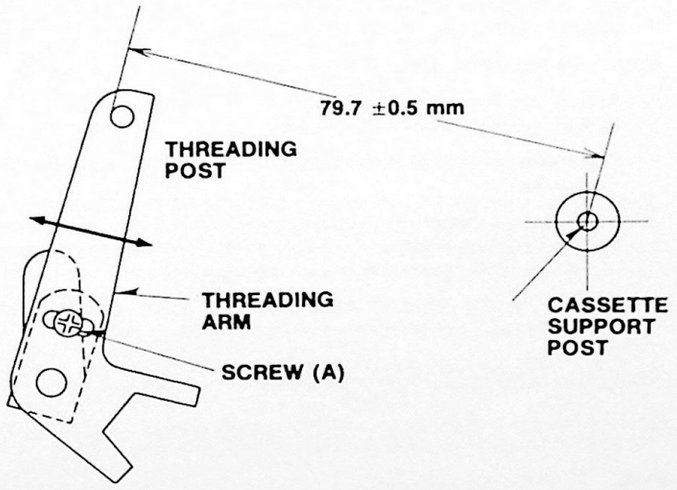

Figure 15. Threading Post

V Stopper Blocks

The V-Stopper Blocks are set at the factory. Unless either or both V Blocks is replaced because of damage, adjustment is not required. If adjustment is indicated, contact your local RCA Consumer Electronics Distributor for information regarding the special jig required for setting. It is necessary to remove video heads and D-D Cylinder motor to perform this procedure — see Page 2-4.

1. Loosen four (4) screws and place V-Block Jig as shown in Figure 16.
2. Move the V Block assemblies into contact with jig and tighten the four (4) retainer screws.

Note: V Stopper Block jig may be very tight and difficult to remove. Use extreme care not to damage V blocks or D-D motor mounting bosses on chassis when removing jig.

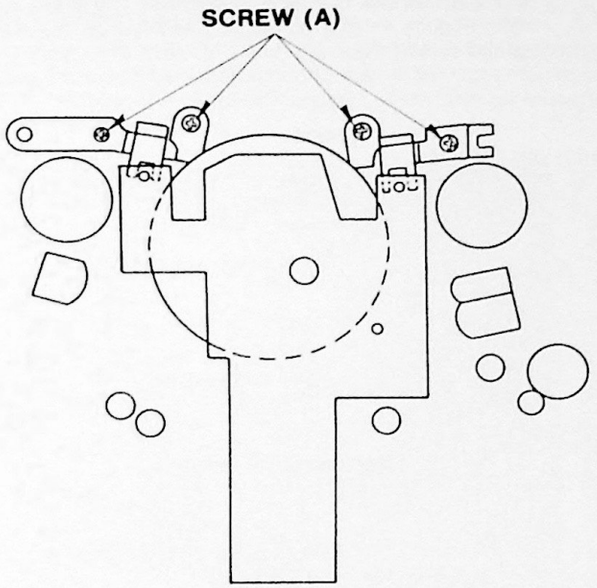

Figure 16. V-Stopper Block

Tape Guide Post Height

Remove cassette holder before adjusting the tape guide posts — see Page 2-4.

Tape guide posts P1 and P4 are related to the height of the supply and take-up reel turntables. These posts are properly adjusted at the factory and normally do not require adjustment unless they are replaced. To adjust the P1 or P4 tape guides proceed as follows:

Install Height Reference Plate (Stock No. 144390) in its proper position, (Figure 12). Use small metal block (Stock No. 144609) check the height of tape guide posts P1 and P4 by placing metal block near post. The bottom of the metal block should align with the flat at the bottom of the guide post. To adjust guide post P1, use Tape Guide Screwdriver (Stock No. 144389) and raise or lower the guide post as required. Adjust P4 by adjusting hex nut "C". The same procedure can be used to make a rough adjustment for tape guide posts P2 and P3 (Figure 17).

Note: For final adjustment of P2 and P3 posts see "Tape Guides Adjustment" on Page 3-10.

Play Switch No. 2 (S6306)

With cassette in machine and power "off," loosen screws "A" and adjust the microswitch position forward until it is actuated (clicks) — see Figure 18. To confirm the microswitch is properly set, apply power to the instrument — tape should immediately load.

Pressure Roller and Solenoid Spring Hook Lever

Insert tape and operate instrument in the "Play" mode. While tape is running, adjust screw "B" so that the clearance between the

MECHANICAL ADJUSTMENTS (continued)

screw tip and the solenoid bracket is .2mm to .5mm as illustrated in Figure 19. Operate instrument in "Play" mode with tape moving. Attach a spring scale to the top of the pressure roller — Figure 19. Losen screw "C" and insert tension adjust driver (Stock No. 144388) in hole "D". Pull on the scale until tape motion stops. Turn the fine adjust screwdriver for a reading of 1500± 150 grams (3 lb, 5 oz ± 5 oz) on the scale. Tighten screw "C". Adjust screw "A" so that the top of the pressure roller just touches the capstan shaft.

Note: Early production units do not have "gear" arrangement that permits use of fine adjust driver. On these mechanisms slightly loosen screw "C" and nudge bracket in required direction.

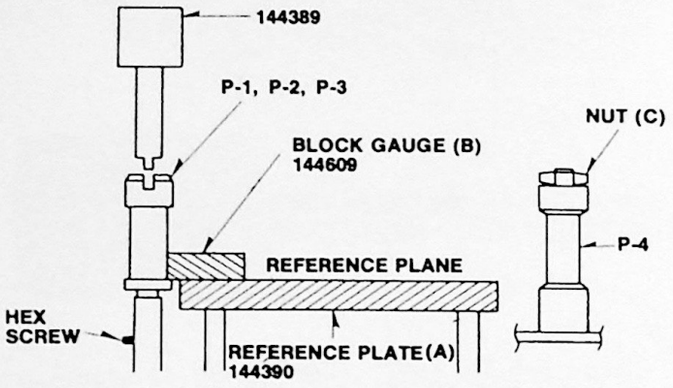

Figure 17. Tape Guide Post Height

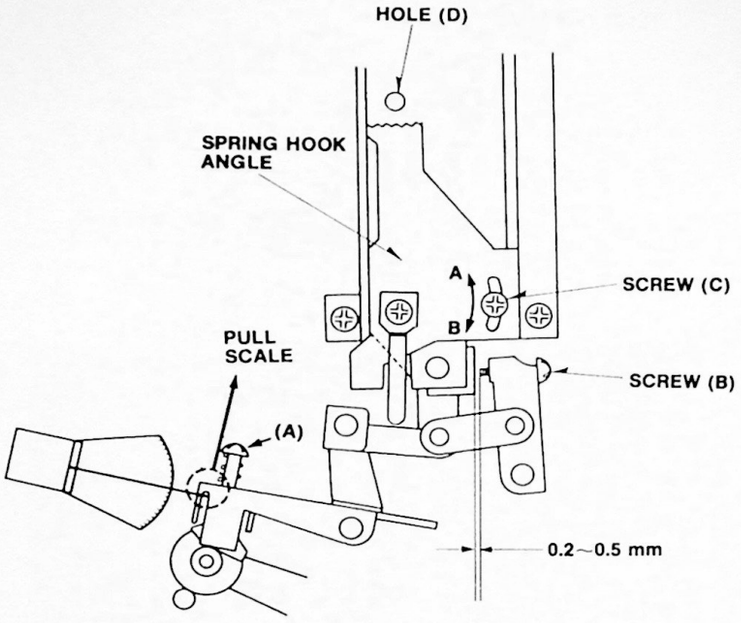

Figure 19. Pressure Roller and Solenoid Spring Hook Lever

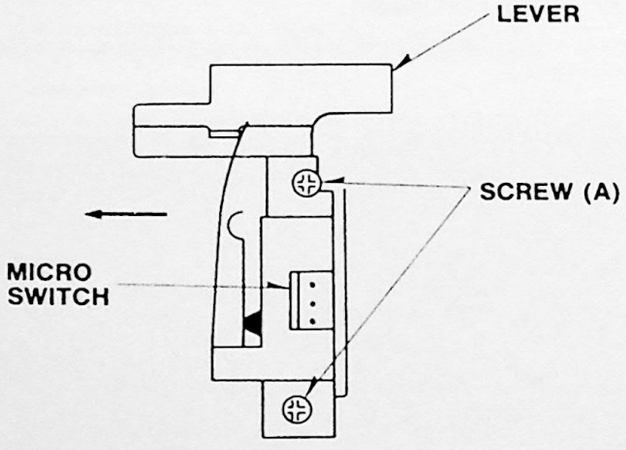

Figure 18. Play Switch No. 2 (S6306)

Turntables Brakes and Drive Clutches

Several torque measurements are required to confirm proper tape transport operation. These measurements confirm proper tape-reel brakes operation (adjustable), take-up reel clutch operation (no adjustment — replace part) and Rewind/Fast Forward clutch operation (no adjustment — replace part).

Brake Torque Confirmation/Adjustment

1. Remove the cassette holder top cover and place instrument in "Stop" mode.
2. Clean the brake surfaces on turntables using "Kimwipes" and solvent (Stock No. 144592) before measuring torque.

Note: Do not allow solvent to wet brake pads.

3. Attach the Adaptor Jig (Stock No. 144386 or 144600) to the Torque gauge (Stock No. 144396).
4. Place torque gauge on supply-reel turntable as shown in Figure 20.
5. Turn Torque gauge in a clockwise direction until the brake begins slipping. Maintain "slipping" rotation and read torque — torque reading should be 450-650 grams/cm.
6. Repeat for the take-up side turning Torque gauge counterclockwise — reading should be 450-650 grams/cm.
7. Now turn Torque gauge clockwise while on the take-up turntable — torque reading should be 65-135 grams/cm.
8. Repeat for supply side, turning torque gauge counterclockwise — torque reading should be 70-130 grams/cm.

Note: If brake adjustment is indicated, it will be necessary to remove the Cassette Holder, and Cassette Lock Arm Assembly (See Disassembly, Page 2-4).

9. To adjust brakes, move the appropriate brake spring (supply or take-up) to another notch as shown in Figure 21 — moving spring towards center lowers torque; away from center raises torque.

Note: Brake torque problems can cause tape stretch, broken tape, loose tape wind in cassette, or tape spillage. These symptoms can usually be corrected by properly cleaning and adjusting the brakes.

MECHANICAL ADJUSTMENTS (continued)

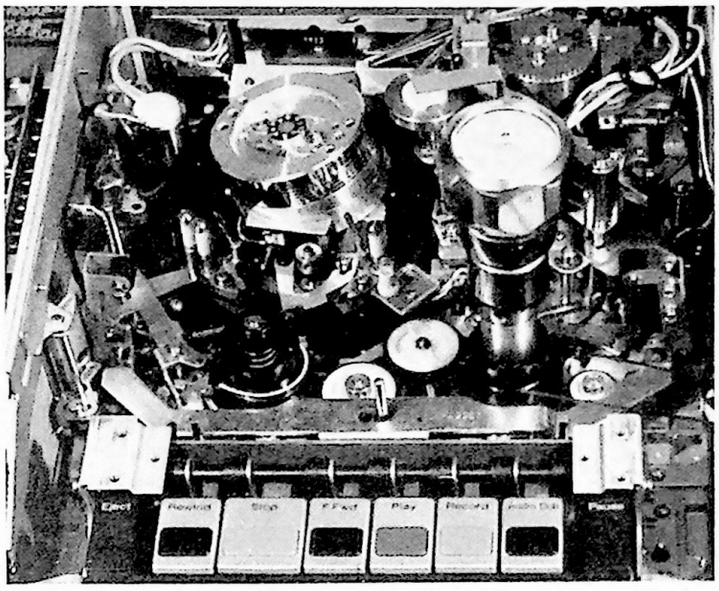

Figure 20. Use of Torque Gauge

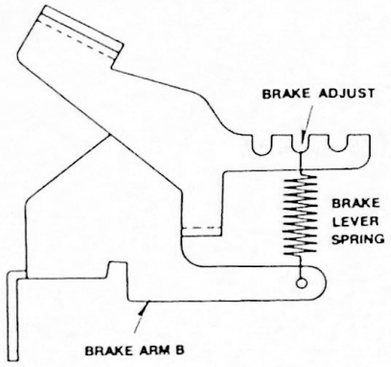

Figure 21. Brake Arm

Play, Fast Forward, Rewind Torque Confirmation

Drive torque problems, which cause symptoms similar to brake problems, usually respond to cleaning the drive surfaces. In the event that cleaning does not correct the problem it will be necessary to replace the appropriate clutch assembly. To confirm operation, proceed as follows:

1. Remove Cassette top cover.
2. Cover up both tape-sensor photocells, located midway on both sides of the tape transport mechanism.
3. Attach the Adaptor jig (Stock No. 144386 or 144600) to the Torque gauge (Stock No. 144396).
4. Place Torque gauge on the take-up reel and operate instrument in the "Play" mode — torque should measure 80-160 grams/cm.
5. Press FAST FORWARD button — torque reading should be 350 grams/cm minimum.
6. Place the Torque gauge on the supply reel and operate the instrument in the "Rewind" mode — torque reading should be 400 grams/cm minimum.

Note: If either of the torque readings are out of tolerance, the appropriate clutch must be replaced. See Tape Transport, Mechanical Disassembly Pages 2-5 and 2-6.

Cassette Lock-Arm Assembly

1. Loosen the two (2) screws on left side).
2. Install Cassette Lock Arm Jig (Stock No. 144392) and move "left" arm assembly left or right until right roller is just touching the top block of the jig or spaced no more than .5 mm from block. (Figures 22,23).
3. Tighten the two (2) screws on the left side.
4. Remove blocks from jig and check that left roller touches slant surface of jig.
5. Adjust the right roller to touch slant surface of jig by loosening the three screws located on the side of the right side roller and positioning the moveable section of the arm as required — see Figures 22,23.

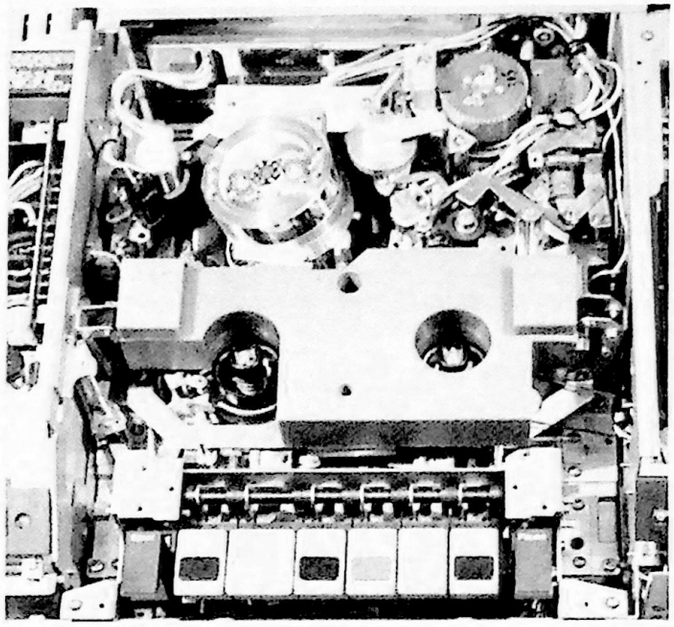

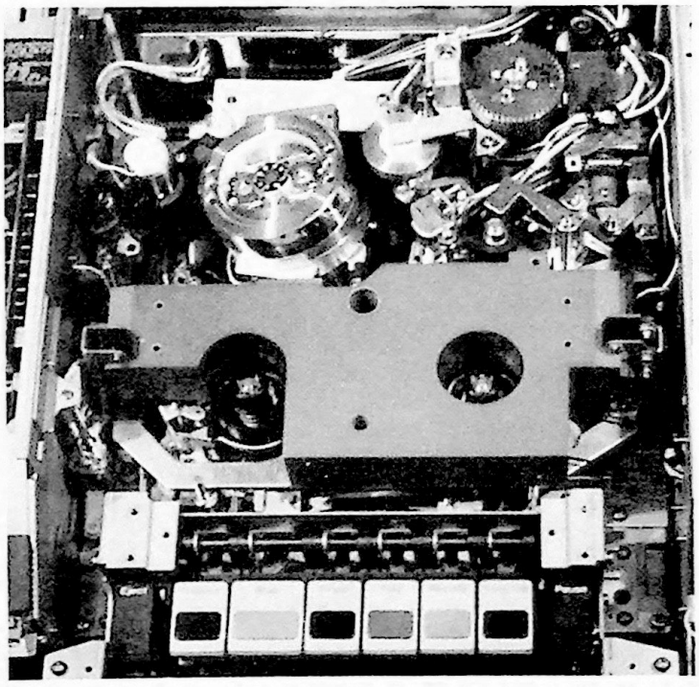

Figure 22. Use of Cassette Lock-Arm Jig

MECHANICAL ADJUSTMENTS (continued)

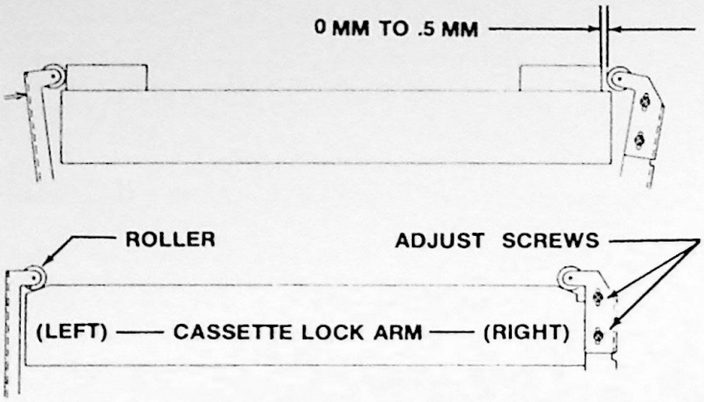

Figure 23. Cassette Lock-Arm

Capstan Position

Install Capstan Reference Plate (Stock No. 144393) in its proper position. Loosen three (3) screws in the capstan holder. Move capstan holder so that the capstan fits snugly in the notch of the Capstan Reference Plate. Tighten the three (3) screws (Figure 24).

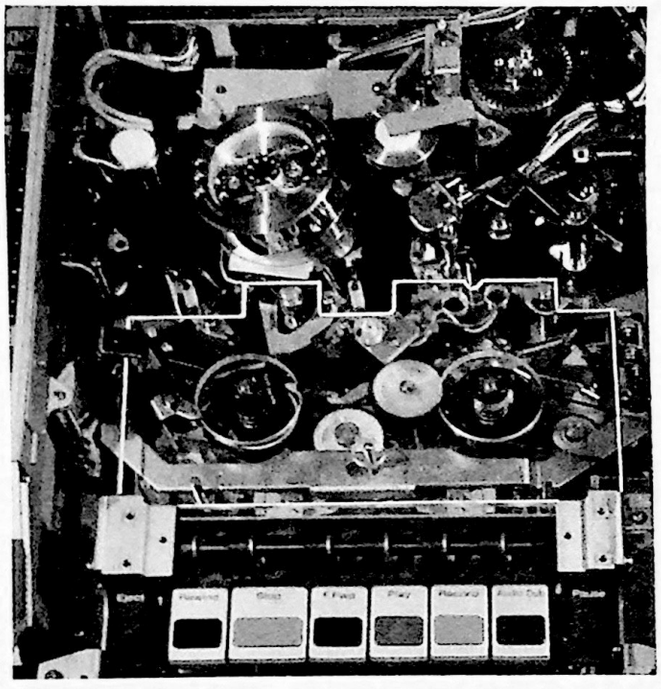

Figure 24. Use of Capstan Plate

Eject Lever

Loosen screw B and adjust the clearance at point A for .5 mm to 1 mm. Tighten screw — see Figure 25.

Cassette Holder

Improper adjustment may cause tape feed problems; binding of supply or takeup reels, slow tape feed or complete mechanism shutdown.

1. Carefully seat the cassette holder in machine.
2. Replace the four (4) retaining screws — (two (2) on each side). **Do Not Tighten.**
3. Place the cassette holder jig (Stock No. 144394) in cassette holder — see Figure 26.
4. Push cassette holder and jig "down" as when inserting tape.
5. Pull back on the cassette holder until the two tabs (located in the front of the cassette holder) are touching the cassette holder jig. At the same time make sure the rear brackets of the cassette holder are parallel with the edges of their mounting surfaces before tighting the four screws.
6. Check the counter belt to make sure it is not caught on the cassette holder before operating the instrument.

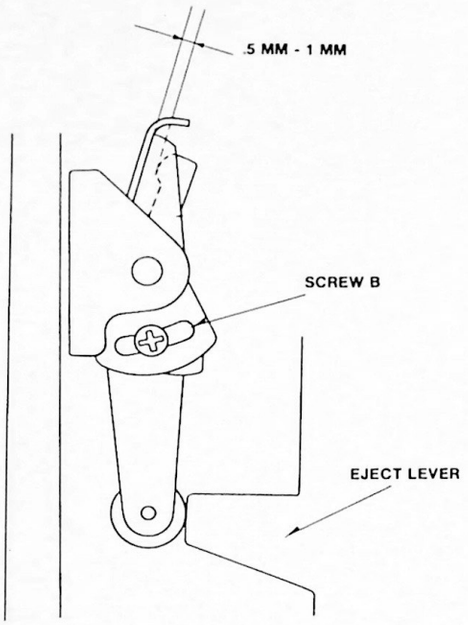

Figure 25. Eject Lever

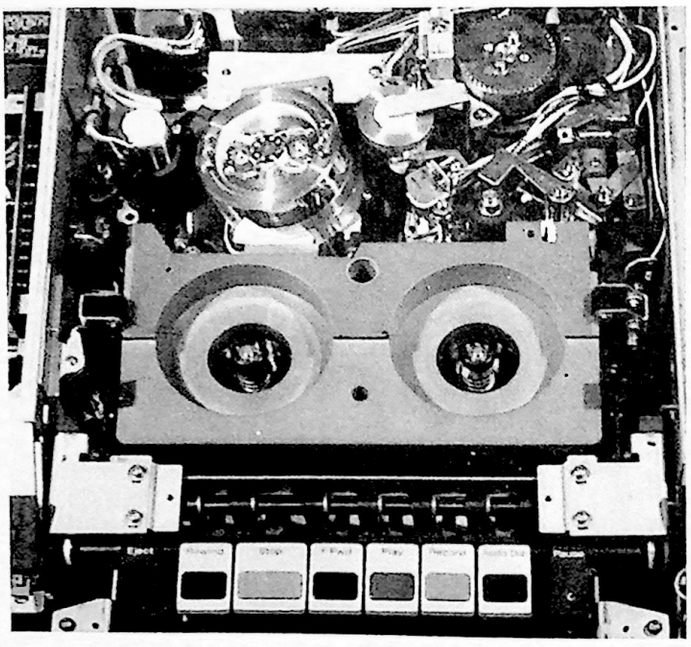

Figure 26. Use of Cassette Holder Jig

MECHANICAL ADJUSTMENTS (continued)

Back Tension

When the back tension is properly adjusted, the service test tape (recorded under laboratory conditions) will play back with minimum skew error — picture displacement in line following head switching. As specified, tape back tension is set to a nominal range of 20 to 25 grams as measured with a tape tension gauge inserted in the tape path at a position corresponding to the supply (left-side) impedance roller — roller must be held back to allow use of gauge. The tension is set as follows:

1. Press PLAY button, and after tape has loaded, insert tape tension gauge (Tentel Model T2-H5-ML*) in tape path to confirm tension reading — should be 20 to 25 grams after tape has been running 10 to 20 seconds.

Note: This should be performed at the start of a tape so that most of tape load is on supply reel.

2. If adjustment is required, loosen lock screw (Figure 27) and insert tension adjustment driver (Stock No. 144388). Turn driver clockwise to raise tension, counterclockwise to lower tension.
3. Tighten lock screw to secure adjustment.

* Tentel Corporation
50 Curtner Avenue
Campbell, California 95008

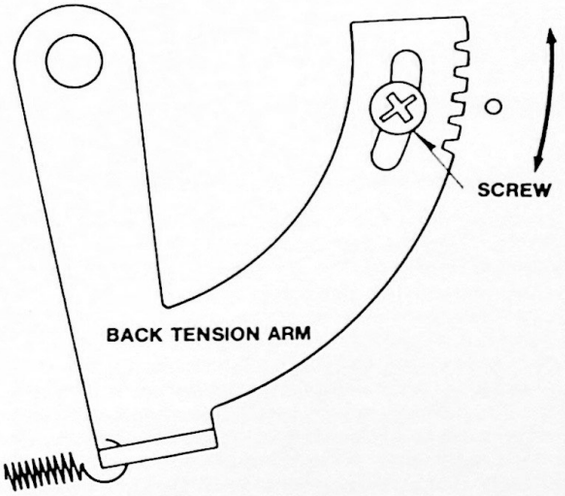

Figure 27. Back Tension

Belt Replacement

All belts, except the capstan belt, may be replaced individually and without removing other mechanical parts. To replace the capstan belt, it is first necessary to remove the capstan shaft holder. Three different capstan belts are available and capstan speed is set by using the appropriate belt. See chart below for proper replacement belt. When installing a new capstan belt, make sure the "group" of two, three or four marks are positioned in the direction of rotation of the capstan pulley. Confirm proper tape speed after replacing belt.

||||	|	If frequency is less than 953Hz (Stock No. 144605)
|||	|	If frequency is normal 958Hz ±5Hz (Stock No. 144606)
||	|	If frequency is more than 963Hz (Stock No. 144266)

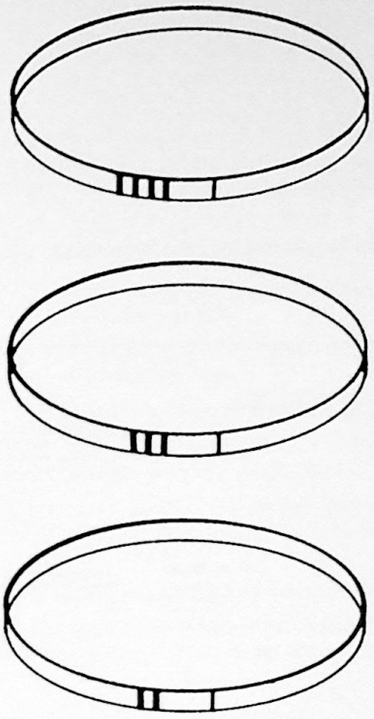

Figure 28. Capstan Belts

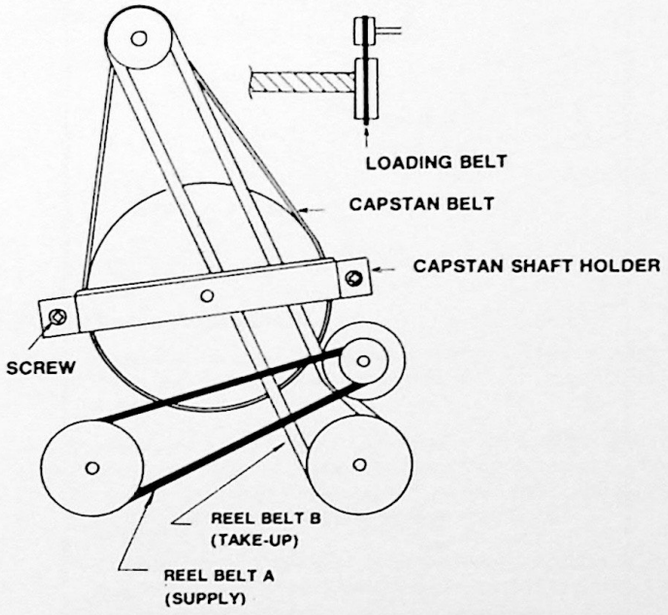

Figure 29. Belt Replacement

Tape Speed Confirmation

The tape transport speed is set to close tolerances to ensure that tapes made on one VHS recorder can be played back on another.

In the event that the capstan motor (includes pulley), capstan belt or the capstan (includes Flywheel) are replaced, tape speed must be checked and adjusted if necessary by changing the capstan belt.

MECHANICAL ADJUSTMENTS (continued)

1. Connect frequency counter to TP 203 on the Servo Circuit Board (Figure 30).
2. Playback monoscope signal on test tape and note Frequency counter reading — should read 958 ±5Hz.
3. If the Frequency indicated is low (less than 953Hz) replace capstan belt with Stock No. 144605 belt. If the Frequency indicated is high (more than 963Hz) replace capstan belt with Stock No. 144266 belt. Nominal speed belt is Stock No. 144606.

Note: See "Belt Replacement" for installation procedure.

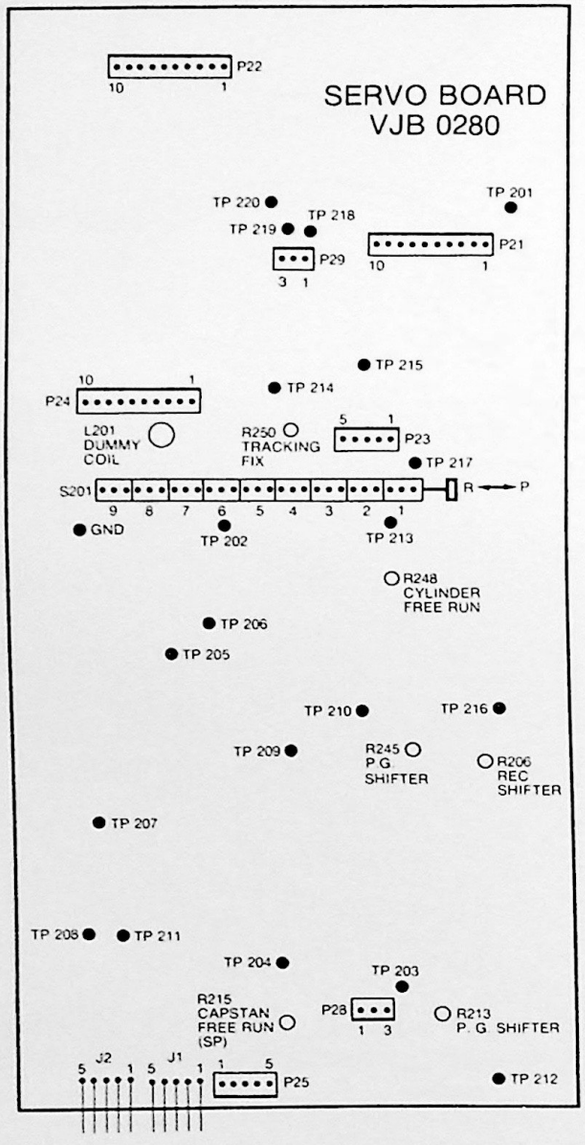

Figure 30. Servo Board

Rough Tape Travel Adjustment

Using a **blank tape,** place the instrument in "Play" and note the following:

1. The tape should be in full contact with all tape guide posts.
2. The tape should be crease-free with no slack.
3. The impedance rollers should be moving freely.
4. The tape should be perpendicular to the longitudinal axis of the heads when crossing the erase head and the A/C head.
5. The tape should be centered top to bottom on the head when crossing the full erase head.
6. Looking at the bottom of the A/C head with the tape running, .05 mm of the head should be visible — see Figure 31.
7. The tape should follow the lower-edge guide surface on the D-D cylinder.

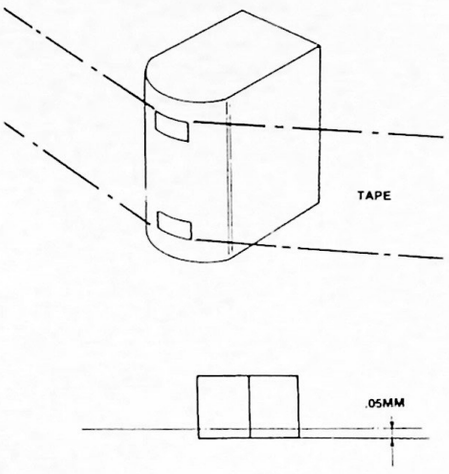

Figure 31. Rough Adjustment Of Tape Travel

Mechanical Interchangeability Considerations

The tape-guide adjustments position the tape so that the pre-recorded tracks on the test tape align perfectly with the scan of the video head assembly. The Mechanical Interchangeability Adjustment procedures will insure that a tape recorded on one VHS recorder will play back properly on another machine. Usually little or no mechanical adjustment is required after routine (head replacement) servicing. Before making any adjustments, perform the following Interchangeability Confirmation procedure to determine if adjustment is required. If video heads are replaced, it will also be necessary to confirm the video head equalization and PG Shifter adjustments. If major mechanical servicing was performed (tape guide replacement, etc.) perform "Rough Tape Travel Adjustment" before using test tape.

Interchangeability Confirmation

This confirmation check should be performed after any servicing operation that could adversely affect the tape path; i.e. upper cylinder (video head) replacement, D-D motor replacement, tape guide replacement, control track/audio head replacement, etc. If unit passes this confirmation check, no tape guide adjustment is required.

1. Connect scope channel-1 (5V/div.; 5 ms/div.) to TP 206 — trigger on channel-1 signal (Figure 30).
2. Connect scope channel-2 (20 mV/div.) to TP 511 (Figure 32).
3. Play monoscope signal on test tape and confirm tracking fix pulse width is 20.8 to 21.3 ms when the TRACKING control is at the detent (fixed) position — adjust R250 (tracking fix) for proper pulse width if necessary.
4. Adjust TRACKING control for maximum RF envelope amplitude (TP 511 signal) at center of envelope.

MECHANICAL ADJUSTMENTS (continued)

5. Adjust scope vertical gain control so that maximum envelope amplitude is 4 graticule divisions.
6. Turn TRACKING control clockwise until any part of envelope amplitude drops to 50% — 2 graticule divisions.
7. Adjust **scope** horizontal position control to place moveable edge of tracking fix pulse (TP 206 signal) on graticule line and note its position.
8. Turn **TRACKING** control counterclockwise until **any part** of envelope amplitude drops to 50% — 2 graticule divisions
9. Determine tracking fix pulse width change between the two 50% points. This should be greater than 7 ms. If so, no tape guide adjustment is required. If the change in pulse width is less than 7 ms, tape guide adjustment is required.
10. Set TRACKING control to detent (fixed) position. Then adjust Control Track/Audio Head assembly position to obtain maximum RF envelope (TP 511 signal) at the detent fixed position.

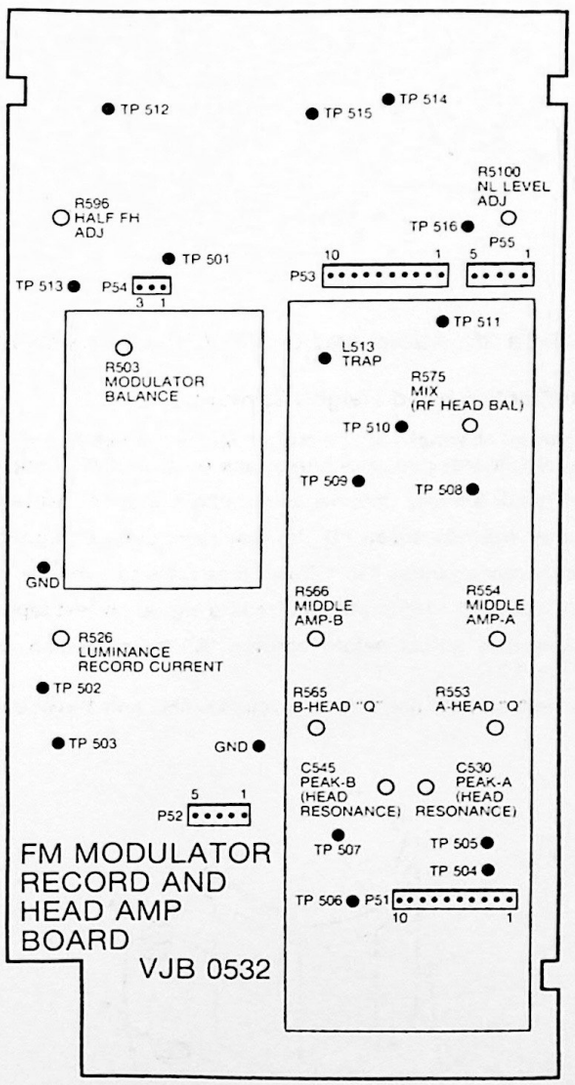

Figure 32. FM Modulator Record and Head Amp Board

P2 and P3 Tape Guide Adjustments

1. Connect Channel-1 scope probe (2V/div.; 5ms/div.) to TP 510 (FM Modulator Record and Head Amp Circuit Board, Figure 32).
2. Connect Channel-2 scope probe (.2V/div) to TP 511.
3. Set TRACKING control to detent (fixed) position and play back test tape monoscope signal.
4. Adjust guide posts down (CW) until bottom edge of tape slightly bows away from cylinder guide.
5. Monitor the head RF envelope at TP 511.
6. Raise (CCW) P3 (right guide) to obtain maximum amplitude at right side of head envelope.
7. Raise (CCW) P2 (left guide) for maximum amplitude at the left side of the head envelope.
8. Adjust TRACKING control for best envelope.
9. Touch up tape guides (P2 and P3) for maximum amplitude flat envelope — read note in "Angle Posts" procedure.
10. Adjust control head position (if necessary) to move the best envelope condition to the TRACKING control detent position.
11. Perform Interchangeability Confirmation Check procedure.

Note: In the event that correct head envelope is not obtainable, check Audio/Control (A/C) head adjustments — see Page 3-11.

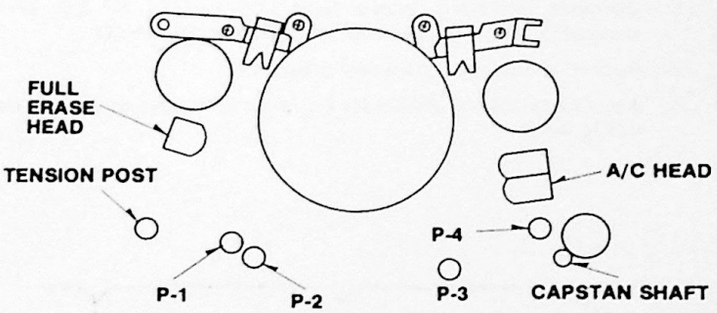

Figure 33. Tape Guides Location

Angle Posts Adjustment

Note: Normally, if only the upper cylinder (video heads) has been replaced, the angle posts will not require adjustment.

The necessity of angle-post adjustment is indicated if the head output envelope does not close-up after tape guide adjustment, i.e.: The amplitude of the envelope at the head-switching points is less than 70% of the maximum envelope amplitude.

Preliminary: Connect Channel-1 scope probe (2V/div.; 5ms/div.) to TP 510 (FM Modulator Record and Head Amp Circuit Board, Figure 32).

1. Set angle posts at their mechanical center positions (Figure 34).
2. Adjust (P2 and P3) tape guides for best envelope. If proper envelope close-up is not obtained at head-switching points, adjust left-side (P2) angle pin for best close-up at left side of envelope consistant with requirement of Step 7 of Tape Guide adjustment procedure. If close-up problem is at right side of envelope, adjust right-side (P3) angle pin for best close-up consistant with the requirement of Step 6.
3. Check for equal top and bottom tape tension and compromise adjustments for equal top/bottom tension if required.

MECHANICAL ADJUSTMENTS (continued)

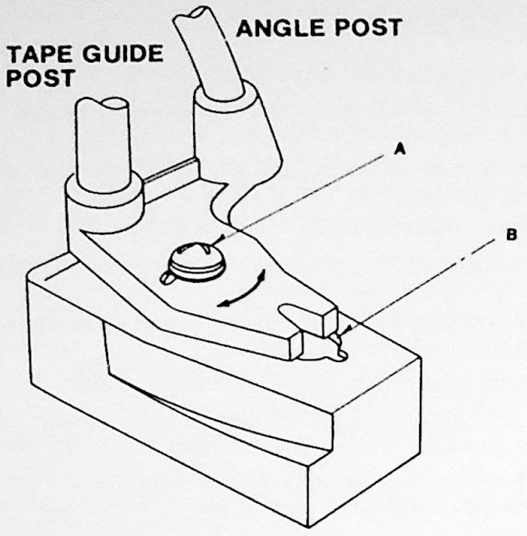

Figure 34. Angle Posts

FM Mix (Head Balance)

1. Connect channel-1 scope lead (.1V/div.) to TP 511 (FM Modulator Record and Head Amp Board, Figure 32).
2. Record a color program and playback.
3. Adjust mix control (R575) for equal head output as illustrated in Figure 35.

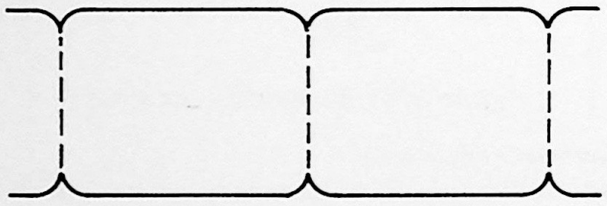

Figure 35. Head Balance

Creasing Or Slack Tape

Load instrument with blank tape and place in "Play" mode. With the tape running, inspect the tape path for unequal top-to-bottom tape tension and/or creasing or frilling along top or bottom edges of tape. If the tape is creasing or frilling, check the tape as it goes "on" and comes "off" the D-D Cylinder. The tape should follow the lower-edge guide surface on the cylinder. If the tape is high on the guide surface, rough adjust P2 and P3 tape guides to correct this condition. If unequal top-to-bottom tape tension is observed, loosen screw "A" on appropriate tape-guide base (Figure 34). Then use tape transport screwdriver (Stock No. 144387) to move the tape-guide base in either direction to correct unequal tape tension condition. It will now be necessary to perform P2 and P3 Tape Guide Adjustments and confirm interchangeability — see Pages 3-9 and 3-10.

Audio And Control Head (A/C Position)

This adjustment establishes proper tape tracking when the TRACKING control (R6301) is in its detented position.

1. Connect Channel-1 scope probe (.2V/div.) to TP 511 (FM Modulator Record and Head Amp Board).
2. Set TRACKING control (R6301) to the detent (fixed) position.
3. Playback monoscope signal on test tape.
4. Loosen the A/C head base plate screws "E" & "F" — see Figure 36.
5. Carefully move the A/C head base plate in either direction for maximum head envelope output.

Note: Three maximum outputs may be obtained when adjusting the A/C head. Use the middle position.

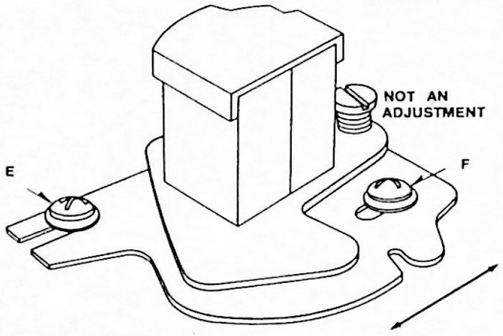

Figure 36. Audio and Control Head Assembly

Audio/Control Head Height/Azimuth

1. Connect channel-1 scope probe (.5V/div.; .5 ms/div.) to TP 401 (Audio Board) or audio-output jack on rear of instrument.
2. Playback a 6-kHz (monoscope) audio signal on test tape.
3. Adjust **azimuth screw "B"** for maximum output. (Figure 37).
4. Set scope channel-1 to 1V/div.; time base to 2 ms/div.
5. Playback a 1-kHz (multiburst) audio signal on test tape.
6. Alternately adjust **height screws "A"** for maximum output. (Figure 37).
7. Repeat steps 2 and 6 for maximum 6-kHz and 1-kHz output.

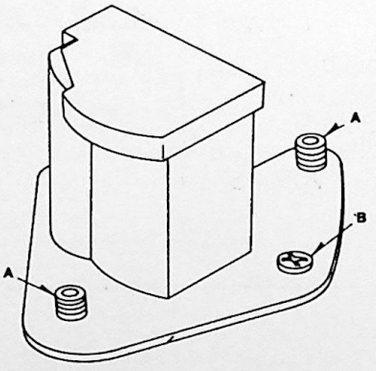

Figure 37. Audio and Control Head

RCA

Video Cassette Recorder VHS

Model VBT200

Service Data

Electrical Adjustments Section

ELECTRICAL ADJUSTMENTS — CONTENTS

Audio Bias Trap 4-9
Audio Trap 4-10
Bias Current 4-9
Chroma Modulator Balance 4-12,13
Chroma Record Level 4-15
Color Killer 4-12
Comb Filter 4-11,12
Component Board Location and Identification 4-1
Control Head (A/C) Output Confirmation 4-6
Cylinder Motor Free-Running Speed 4-7
Cylinder Speed Servo Gain Confirmation 4-6
Dummy Coil 4-9
E-E Video Level 4-11
Electronic Test Equipment Requirements 4-2
FM Carrier Interleave (Half FH) 4-14
FM Modulator and Video Clippers 4-13,14
FM Modulator Balance 4-15
Head Balance 4-2
Limiter and Demodulator Balance 4-15,16
LP Mode Capstan Motor Free-Running Speed 4-8
Luminance Record Level 4-15
Oscillator Level 4-6
Playback Chroma Level 4-11
Playback Equalizer 4-9
Playback Gain 4-10
Playback Nonlinear Video Level and Frequency Response 4-16
Playback Video Level 4-11
Pulse Generator (P.G.) 4-5,6
Record Nonlinear Emphasis 4-13
Record Shifter 4-7
Regulated 12V 4-5
Sound IF Alignment 4-18
SP/LP Detect Shifter 4-9
SP Mode Capstan Motor Free-Running Speed 4-8
Supply Photo Sensor 4-5
Takeup Photo Sensor 4-5
Tracking Fix 4-6
Unregulated 12V 4-5
Unregulated 18V 4-5
Video Head Equalization Confirmation 4-2
Video Head Equalization 4-2,3
Video IF and AFT Alignment 4-17,18
Y-C Timing 4-16
1/2 Frequency Divider Multivibrator Confirmation 4-5
2-μs Pulse 4-12
2.517-MHz AFC 4-12
3.58-MHz Crystal Oscillator 4-12
3.58-MHz Trap 4-13
3.58-MHz Variable Crystal Oscillator APC 4-12
60-Hz Oscillator Frequency Confirmation 4-5

ELECTRICAL ADJUSTMENTS

This section provides information and detailed instructions to adjust the electronic circuits of this instrument. In some instances, two procedures are provided. The "Preferred" procedure should be performed where the prescribed test equipment is available. The "Alternate" procedure uses test equipment found in VCR Service Centers.

Note: Alignment of T301, T303, T304, T306, T307, T308, T801, T802, T803, T804, and T805 should not be attempted in the field because special equipment is required. These transformers have been carefully aligned at the factory. In the event that adjustment of these transformers is required, contact your RCA Consumer Electronics Distributor Service Manager.

Electronic Test Equipment Requirements

1. **Dual-Trace Triggered Oscilloscope** with Lo-Cap (×10) and Direct Probes

   Response: DC — 20 MHz
   Sensitivity: 5 mV/div.
   Max. Sweep Rate: .1 μs/div.

2. **Frequency Counter** — 7 digits

   Sensitivity: 25 mV — 5V
   Range: DC — 16 MHz

3. **VTVM or Other Electronic Volt/Ohmmeter**

4. **Video Generator**

Two types of generators can be used for video circuit adjustments. Playback adjustments will use the VCR test tape. The two generator types are:

1. NTSC color bar generator — standard 75% saturated color signal and 5- or 10-step luminance signal (Figure 6).
2. Gated rainbow generator — capable of producing a video signal of 1V p-p across a 75-ohm load. Required signals from this type generator are color bars (adjusted for .3V p-p chroma) and a window (superpulse) signal of 1V p-p with .3V p-p sync pulse (Figure 7).

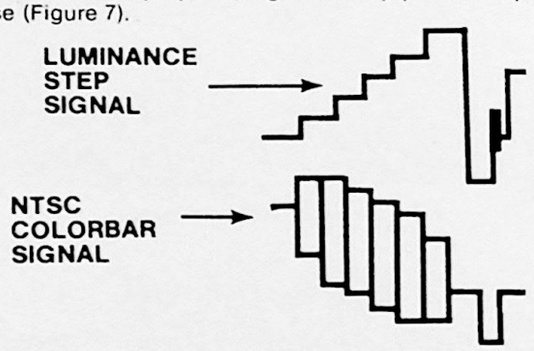

Figure 6. NTSC Signals

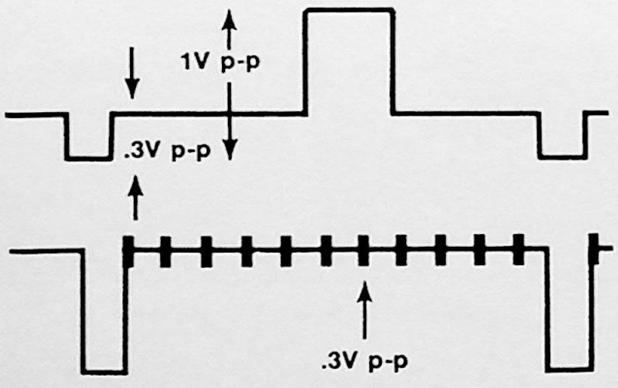

Figure 7. Gated Rainbow Signals

Head Balance (Figures 8, 12)

1. Connect channel-1 scope probe (.1V/div.; 5 ms/div.) to TP 511 (FM Modulator Record and Head Amp Board).
2. Record a color program and play back.
3. Adjust mix control (R575) for equal head output at TP 511.

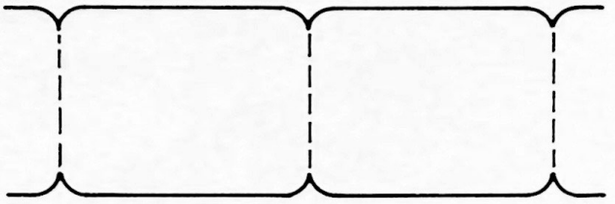

Figure 8. Head Balance

Video Head Equalization Confirmation

These adjustments affect the frequency response of the two individual video-head playback preamplifiers contained on the FM Modulator Record and Head Amp Board. Normally, when video heads are replaced, little or no adjustment of "head equalization" is required. However, in the event that the upper cylinder (video head assembly) is replaced, or the preamplifier circuitry is serviced, the overall "head system" frequency response and matching should be checked by playing back the multiburst signal on the test tape. The signal bursts viewed at TP 308 (.5V/div.;10 μs/div.) should be within the limits shown in Figure 9 and there should be minimum flicker of the 2- and 3-MHz bursts.

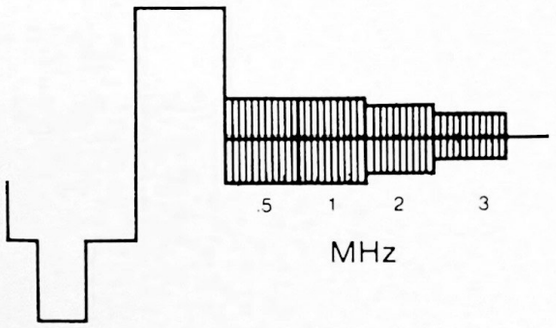

.5 MHz	100%
1.0 MHz	100% to 80%
2.0 MHz	80% to 50%
3.0 MHz	63% to 30%

Figure 9. Multiburst Signal

If the above conditions are satisfactory, no further checks or adjustments of the luminance and color circuits are required after replacing the video heads. Improper response or poor picture quality indicates the need for head equalization. However, this will be a rare case due to the uniformity and close-tolerance matching of the video heads by the factory.

In the event that the above conditions are not met, proceed as follows, if required.

Video Head Equalization
(Preferred Procedure)

Procedure requires triggered 0-10 MHz vertical field rate RF sweep generator that provides vertical sync signal. — Nihon Tsushink: #4220B (Japan).

1. Connect sweep generator to TP 509 and TP 506 on the FM Modulator Record and Head Amp board (Figure 12) through 47K resistors.

ELECTRICAL ADJUSTMENTS (continued)

2. Preset controls as follows. (All controls are on the FM Modulator Record and Head Amp board.)
   R554 (mid-A) ..... Fully clockwise
   R556 (mid-B) ..... Fully clockwise
   R553 (Q-A) ..... Fully counterclockwise
   R565 (Q-B) ..... Fully clockwise
   R575 (mix) ..... Center
3. Place the unit in the "Stop" mode.
4. Connect the scope to TP 511 on the same board.
5. Adjust the sweep generator output level for 800 ±300 mV p-p at 4.5 MHz.
6. Adjust Peak-A (C530) and Peak-B (C545) on the same board to set peaks at 4.5 MHz (Figure 10).
7. Remove resistors and sweep signal.
8. Ground TP 502 on the FM Modulator Record and Head Amp board. Also ground TP 812 on the Chrominance Process board (Figure 15).
9. Connect sweep generator to TP 503 on the FM Modulator Record and Head Amp board.
10. Connect scope between TP 504 (Hot) and TP 505 (Ground) on the same board.
11. Set the sweep generator to the Vertical-Rate mode and supply vertical sync to Video Input TP 301 on Luminance board (Figure 14).
12. Place the unit in "SP" Record" and make a recording of RF-sweep signal.
13. Set the sweep level for 130 mV p-p at 3.4 MHz.
14. Under the above condition, record the sweep signal for 15 minutes.
15. Connect the scope to TP 511. External trigger from TP 202 on the Servo board (Figure 13).
16. Ground TP 506 on the FM Modulator Record and Head Amp board. This allows the channel-A playback signal to be monitored on the scope.
17. Play back the signal just recorded.
18. Adjust Q-A (R553) so that the level at the peak frequency becomes 1.5 ±0.1 times the level at 2 MHz (Figure 11).
19. Now remove TP 503 ground and then ground TP 504 to monitor channel-B response.
20. Adjust the Q-B (R565) so that the level at the peak frequency becomes 1.5 ±0.1 times the level at 2 MHz (Figure 11).
21. Remove TP 504 ground.
22. Adjust the Mix (R575) control so that channel-A and -B outputs are balanced at TP 511.

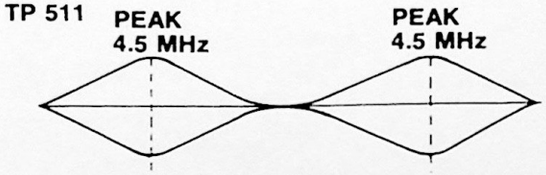

Figure 10. 4.5 MHz Peak Adjust

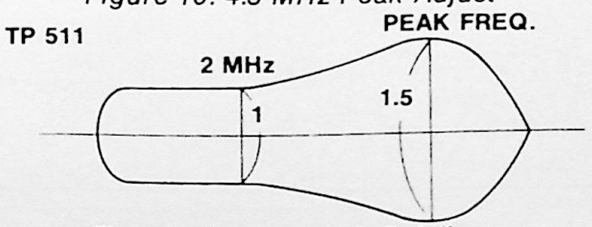

Figure 11. Q-A and Q-B Adjust

Video Head Equalization
(Alternate Procedure)

1. Preset "Q"-A control (R553) fully counterclockwise and "Q"-B control (R565) fully clockwise.

   Also preset middle-amp A and middle-amp B controls (R554 and R566) fully clockwise.
2. Insert test tape and play back multiburst signal.
3. Connect channel-1 scope probe (.5V/div.; 10 μs/div.) to TP 308 (Luminance Board, Figure 14).
4. Ground TP 504 (FM Modulator Record and Head Amp Board, Figure 12).
5. Adjust Peak-B trimmer capacitor (C545) for minimum 2-MHz burst (Figure 9).
6. Adjust "Q"-B control (R565) to set 2-MHz burst at 90% with reference to 100% .5-MHz and 1-MHz bursts (Figure 9).

Note: Under some conditions, adjustment of R565 will cause the 1-MHz burst to increase in amplitude above 100% with respect to the .5-MHz burst. If this occurs, **very slightly** reduce the setting of R566 and repeat Step 6 until the proper response is obtained.

7. Remove ground from TP 504.
8. Adjust Peak-A trimmer capacitor (C530) for minimum 2-MHz burst (Figure 9).
9. Adjust (equalize) "Q"-A control (R553) for minimum flicker in the 2-MHz burst (Figure 9).

Note: Under some conditions, adjustment of R553 can cause misequalization of the .5-MHz and 1-MHz bursts. If this occurs, **very slightly** reduce the setting of R554 and repeat Step-9 until minimum flicker is observed in the multiburst pattern.

10. Observe 3-MHz burst amplitude. If the burst amplitude does not meet specification (63% to 30%), adjust frequency response control (R394) on Luminance Board to set 3-MHz burst at 60% or as high as possible.

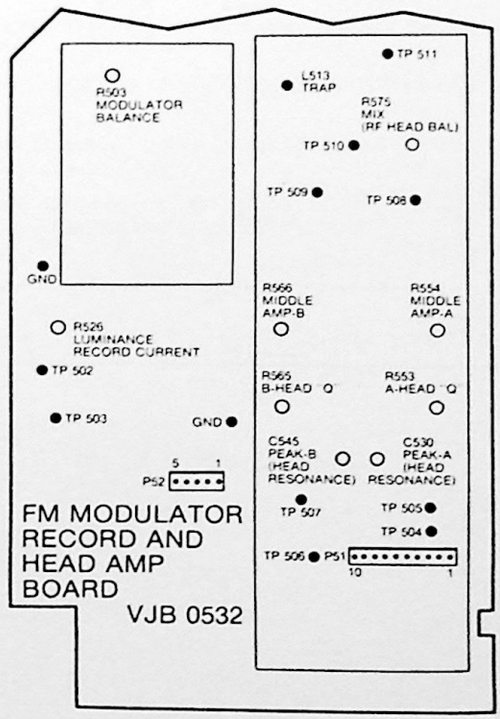

Figure 12. FM Modulator Record and Head Amp Board

ELECTRICAL ADJUSTMENTS (continued)

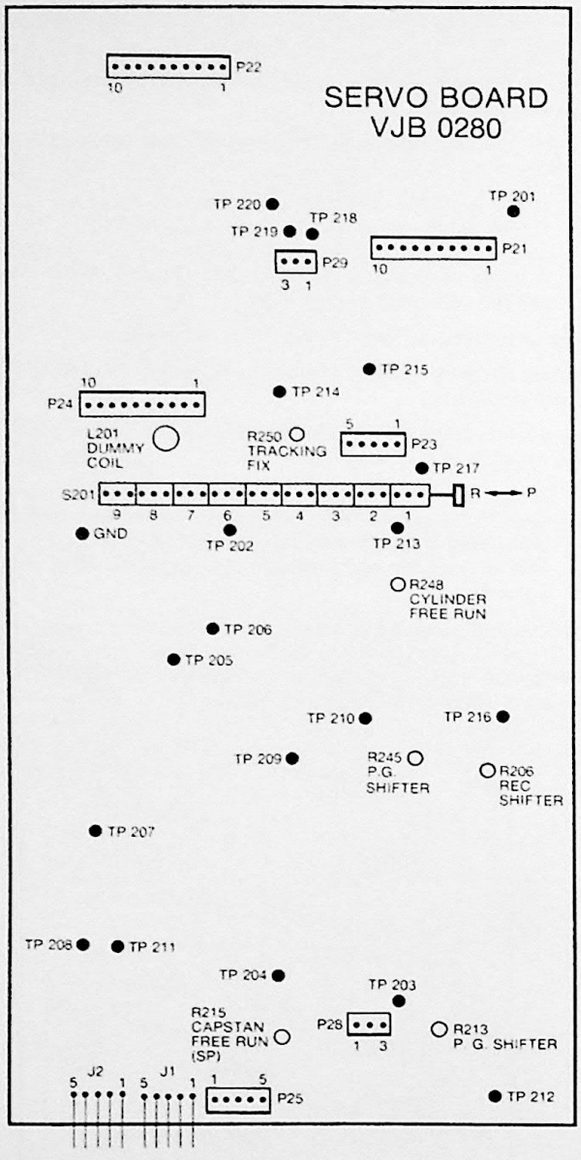

Figure 13. Servo Board

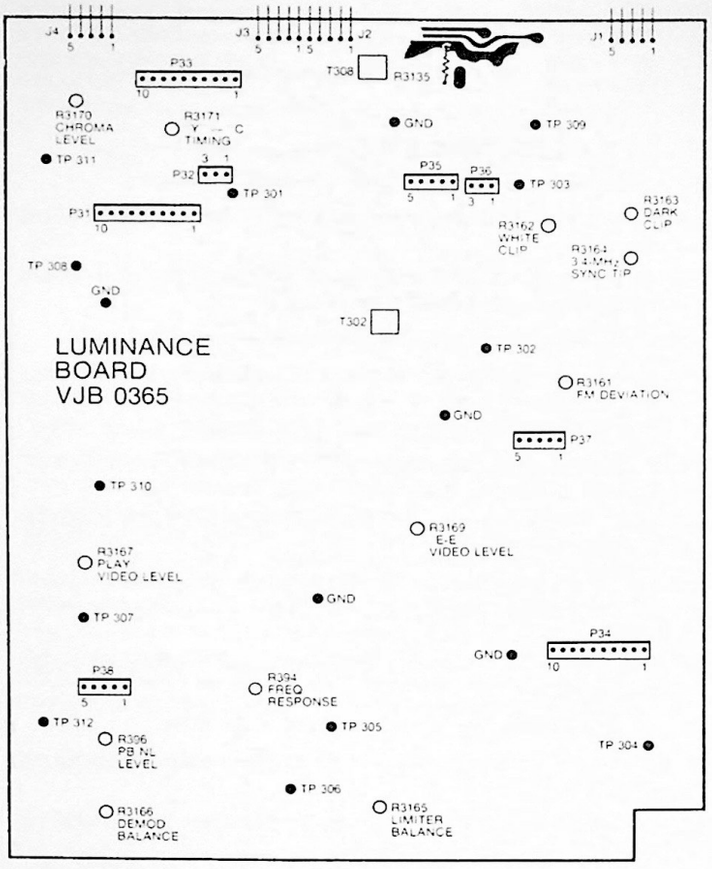

Figure 14. Luminance Board

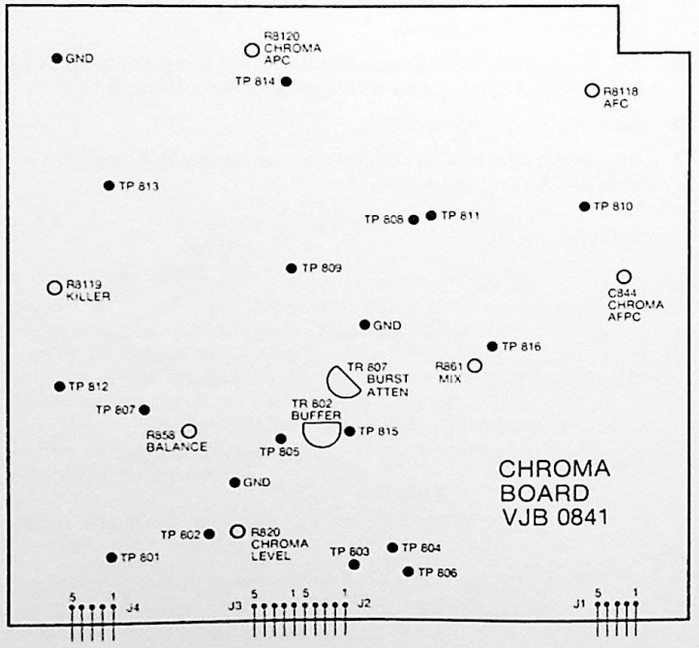

Figure 15. Chroma Board

ELECTRICAL ADJUSTMENTS (continued)

Unregulated 12V Confirmation (Figure 16)

1. Place instrument in "Stop" mode.
2. Measure the voltage at pin 3 or 4 of connector P62 (Regulator and Transport Board).
3. The voltage should read 12V ±3.5V.
4. If voltage is not correct, check voltage between pins 14 and 15 on Power Supply board — should read 12.5 VAC. (Also check D101, D102 and C106, if correct voltages are not present).

Unregulated 18V Confirmation (Figure 16)

1. Place instrument in "Stop" mode.
2. Measure voltage at pin 9 of connector P62 (Regulator and Transport Board).
3. The voltage should read 18V ±1.5V.
4. If this voltage is not correct, check the voltage between pins 12 and 13 on the Power Supply board. It should read 16 VAC. (Also check D103, D104, D105, D106 and C111, if correct voltages are not present).

Regulated 12V (Figure 16)

1. Place instrument in "Stop" mode.
2. Connect VTVM to TP 614 (Regulator and Transport Board).
3. Set 12V adjust control (R678) for 12V ±.1V.

Takeup Photo Sensor (Figure 16)

1. Load instrument with blank tape.
2. If necessary, rewind tape to the beginning, making sure the translucent leader appears in the front of the cassette.
3. Connect VTVM to TP 602 (Regulator and Transport Board).
4. Set takeup sensor control (R608) fully counterclockwise.
5. Run the tape in "Fast-Forward" for a few seconds, then press the STOP button and adjust R608 for 10.5V ±1.0V.
6. Press the REWIND button and confirm that mechanism stops at the end-of-tape.

Supply Photo Sensor (Figure 16)

1. Load instrument with blank tape.
2. Press FAST-FORWARD button and run the tape to the end, making sure the translucent leader appears in the front of the cassette.
3. Connect the VTVM to TP 601 (Regulator and Transport Board).
4. Adjust the supply sensor control (R602) fully clockwise.
5. Rewind the tape for a few seconds, then press the STOP button and adjust R602 for 10.5V ±1.0V.
2. Press the FAST-FORWARD button to confirm the mechanism will stop at the end-of-tape.

60-Hz Oscillator Frequency Confirmation (Figure 13)

1. Place instrument in the "Stop" mode.
2. Connect frequency counter to TP 202 (Servo Board).
3. Frequency should read 60 Hz ±.I Hz.

1/2-Frequency Divider Multivibrator Confirmation (Figures 13, 17)

1. Place instrument in "Stop" mode.
2. Connect channel-1 scope probe (5V/div.; 5 ms/div.) to TP 216 (Servo Board).
3. Confirm that the "T" portion of the waveform measure 23 ms ±5 ms.

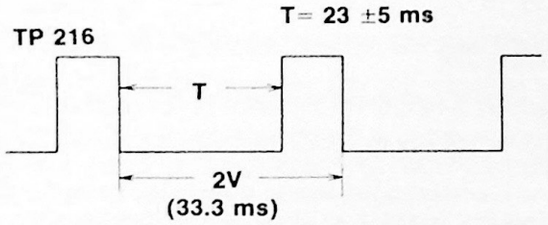

Figure 17. 1/2-Frequency Divider

Pulse Generator (P.G.) (Figures 12, 13, 18)

The Pulse Generator (P.G.) Shifter determines the video head switching point during playback. Misadjustment of either Pulse Generator control (R213 or R245) can cause head-switching noise in the picture and/or horizontal jitter.

1. Load instrument with test tape and play back monoscope signal.
2. Ground TP 508 and TP 509 (FM Modulator Record and Head-Amp Board).
3. Connect channel-1 scope probe (2V/div.; 2 ms/div.; + slope) to TP 201 (Servo Board).
4. Connect channel-2 scope probe (.2V/div.) to TP 511 (FM Modulator Record and Head Amp Board).

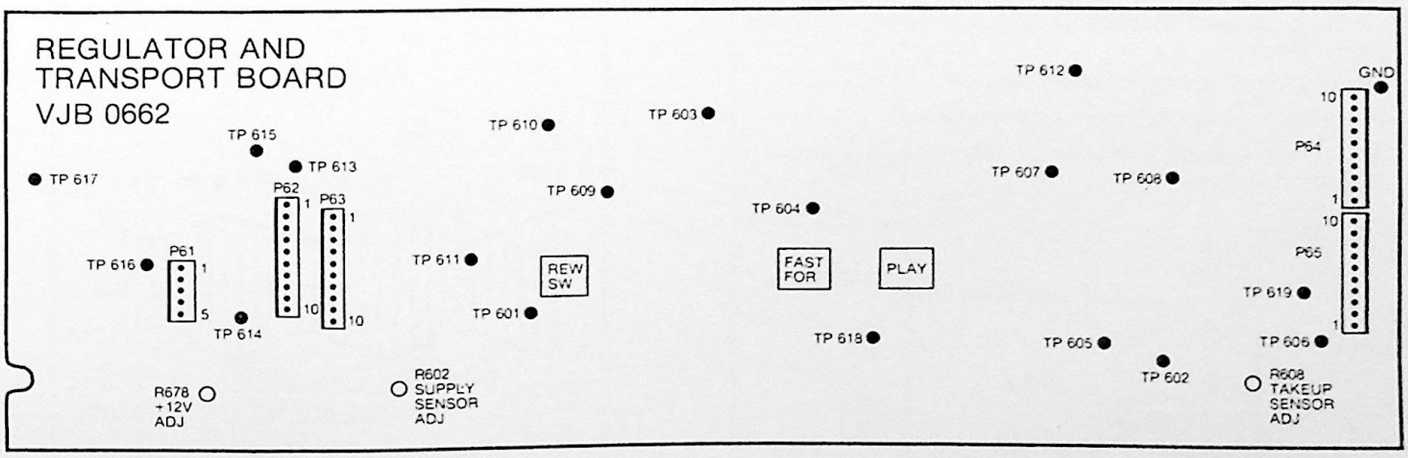

Figure 16. Regulator and Transport Board

ELECTRICAL ADJUSTMENTS (continued)

5. Adjust R245 to center head switch pulse in center of noise pulse.
6. Set scope to (– slope) and adjust R213 to center head switch pulse in center of noise pulse.
7. Remove jumpers from TP 508 and TP 509.

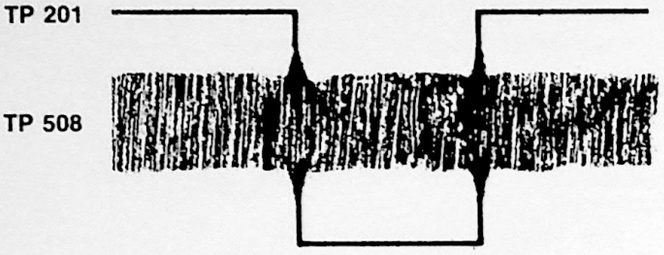

Figure 18. P. G. Shifter

Control Head (A/C) Output Confirmation (Figures 13, 19)

1. Load instrument with test tape and play back monoscope signal.
2. Connect channel-1 scope probe (1V/div.; 5 ms/div.) to TP 215 (Servo Board).
3. The positive portion of the waveform should be over 2V p-p.
4. Make a recording in the LP mode and then play it back. The positive portion of the waveform should be over 2.5V p-p.
5. In the event the positive pulse is less than 2V p-p, the Audio Control (A/C) Head is out of adjustment. (See Mechanical Adjustments, Page 3-11).

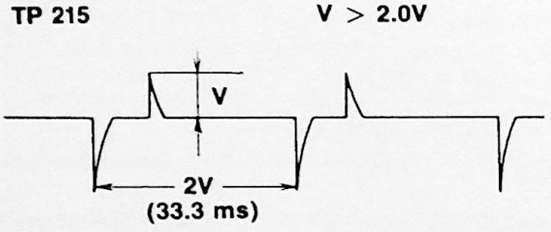

Figure 19. Control Head Output

Tracking Fix (Figures 13, 20)

This adjustment assures that a tape will play back on the same machine it was recorded on with the TRACKING control (R6301) in its "Fixed" (detented) position.

1. Connect channel-1 scope probe (5V/div.; 5 ms/div.) to TP 206 (Servo Board).
2. Set TRACKING control to detent position.
3. Play back a previously recorded SP-mode tape.
4. Adjust R250 so that the negative portion of the squarewave is 20.8 ms to 21.3 ms.

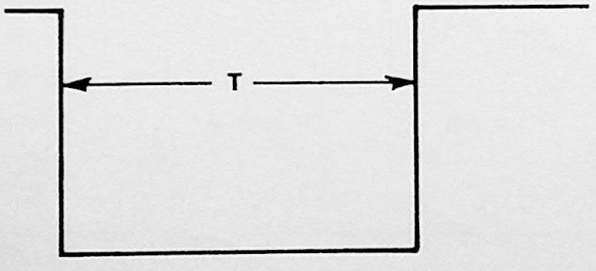

Figure 20. Tracking Fix

Cylinder Speed Servo Gain Confirmation (Figures 21, 22)

1. Load instrument with test tape and play monoscope signal.
2. Connect channel-1 scope probe (1V/div.; 2 ms/div.) to TP 2102 (Cylinder Motor Drive Board).
3. Confirm that the width of the positive pulse is .22 ms ± .04 ms.

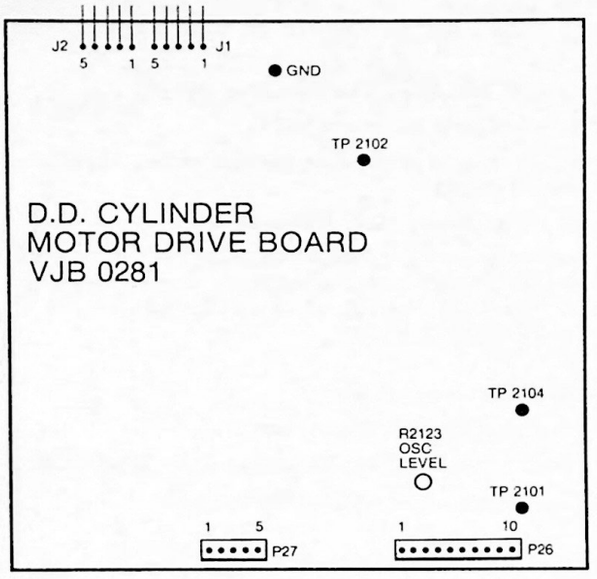

Figure 21. D-D Cylinder Board

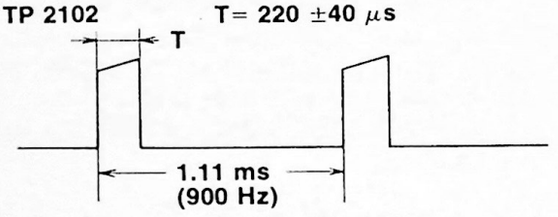

Figure 22. Cylinder Speed

Oscillator Level (Figures 21, 23)

1. Place instrument in the "Stop" mode.
2. Connect channel-1 scope probe (.5V/div.;5 ms/div.) to TP 2104 (Cylinder Motor Drive Board).
3. Adjust oscillator level control (R2123) so that the "A" portion of the waveform is .3V ±.03V p-p.

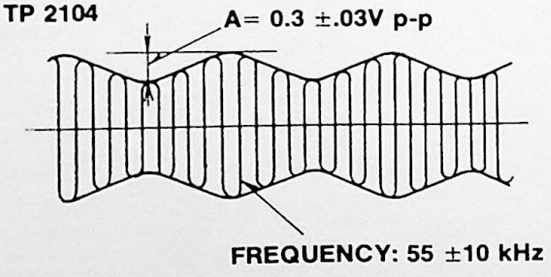

Figure 23. Oscillator Level

ELECTRICAL ADJUSTMENTS (continued)

Cylinder Motor Free-Running Speed (Figures 24, 25) (Preferred Procedure)

This adjustment locks the Cylinder Servo to the system signals and maintains a constant headwheel speed of 1800 R.P.M.

1. Play back a known good SP-mode tape.
2. Connect channel-1 scope probe (2V/div.; 5 ms/div.) to TP 204 (Servo Board).
3. Connect channel-2 scope probe (2V/div.) to TP 205 (Servo Board).
4. Adjust cylinder free-run control (R248) until sample pulse (TP 204 signal) falls on the center of the trapezoid's trailing edge.
5. Set VTVM to .5 VDC scale and center-zero position — connect to TP 209 and TP 210 (Servo Board).
6. Re-adjust R248 for 0V (center scale) indication.

Note: Picture Horizontal stability is affected when R248 is misadjusted.

Cylinder Motor Free-Running Speed (Figure 24) (Alternate Procedure)

1. Play back a known good SP-mode tape.
2. Set VTVM to .5 VDC scale and center-zero position — connect to TP 209 and TP 210 (Servo Board).
3. Adjust R248 for 0V (center scale) indication.

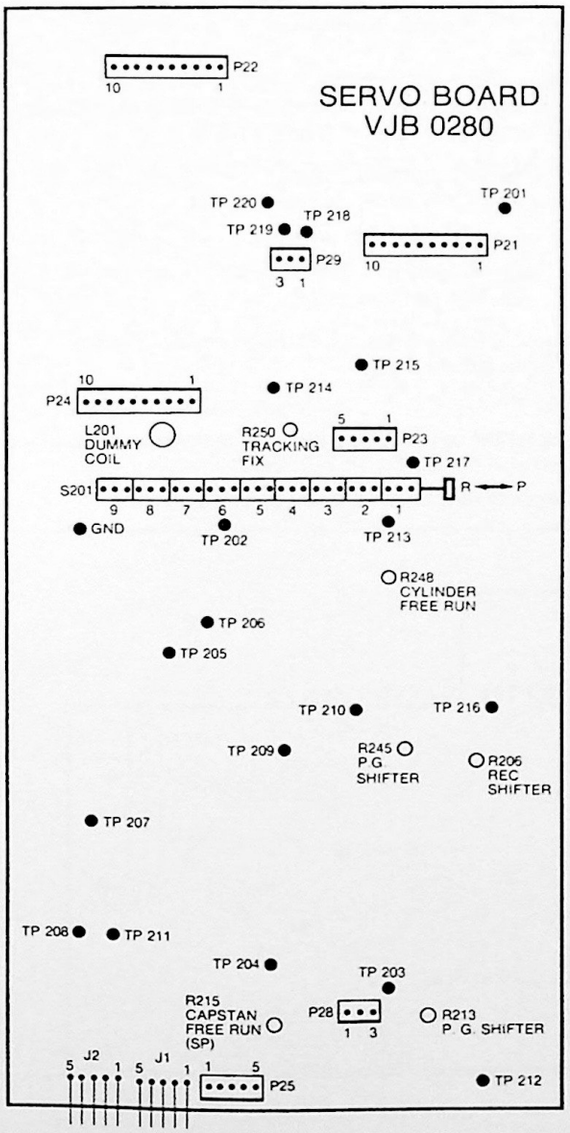

Figure 24. Servo Board

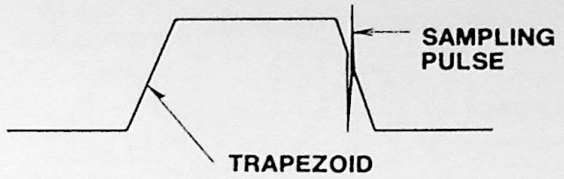

Figure 25. Cylinder Motor Free-running Speed

Record Shifter Adjustment (Figures 24, 26, 27)

This adjustment positions the video head switching point so that head switching occurs six (6) horizontal lines before the start of the vertical sync pulse — three (3) lines before start of equalizing pulses.

1. Load instrument with a blank tape.
2. Connect channel-1 scope probe (5V/div.; 5 ms/div.; + slope) to TP 201 (Servo Board).
3. Connect channel-2 scope probe (.2V/div.) to TP 301 (Luminance Board).
4. Place instrument in "SP-Record" mode and make a recording.
5. Display both signals on scope. Use 10× magnifier to show details of head-switch pulse relative to start of vertical sync.
6. Adjust record-shifter control (R206) so that the head-switching point occurs six (6) horizontal lines before vertical sync or three (3) lines before start of equalizing pulses.

Note: If head switching occurs too soon, a small noise band may appear at the bottom of the picture. If the head switching pulse is late, noise can be introduced during vertical sync, resulting in possible vertical sync problems.

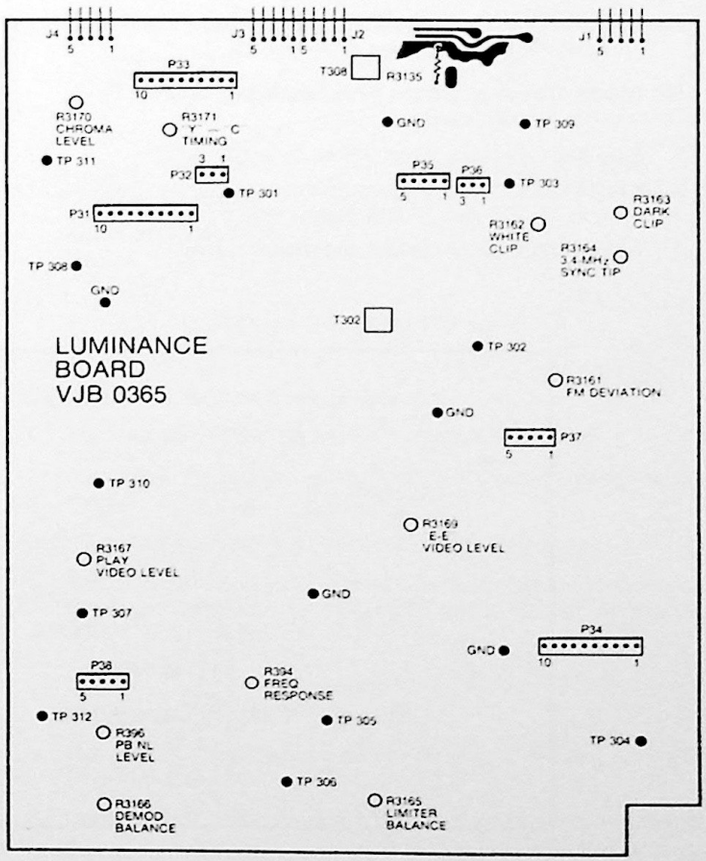

Figure 26. Luminance Board

ELECTRICAL ADJUSTMENTS (continued)

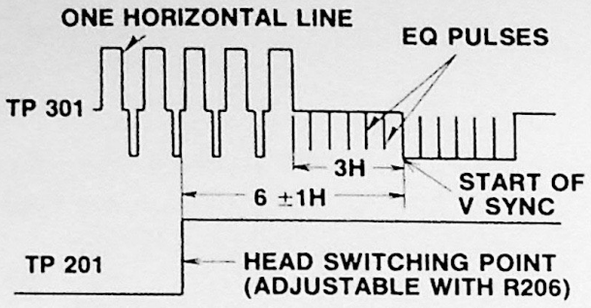

Figure 27. Record Shifter

SP Mode Capstan Motor Free-Running Speed
(Figures 24, 29)

(Preferred Procedure)
This adjustment locks the Capstan Servo to the system signals and maintains proper capstan motor speed.

1. Load instrument with blank tape and place in "SP-Record" mode.
2. Connect channel-1 scope probe (10V/div.; 5 ms/div.) to TP 206 (Servo Board).
3. Connect channel-2 scope probe (2V/div.) to TP 205 (Servo Board).
4. Adjust capstan motor free-run control (R215) until sample pulse (TP 206 signal) falls approximately on the center of the trapezoid's leading edge.
5. Set VTVM to .5 VDC scale and center-zero position.
6. Connect VTVM to TP 207 and TP 208 (Servo Board).
7. Re-adjust R215 for 0V exact (center scale) indication.

Note: Loss of vertical sync and a very noisy picture may result with R215 misadjusted.

SP Mode Capstan Motor Free-Running Speed
(Alternate Procedure)

1. Play back a known good SP-mode tape.
2. Set VTVM to .5 VDC scale and center-zero position — connect to TP 207 and TP 208 (Servo Board).
3. Adjust R215 for 0V (center scale) indication.

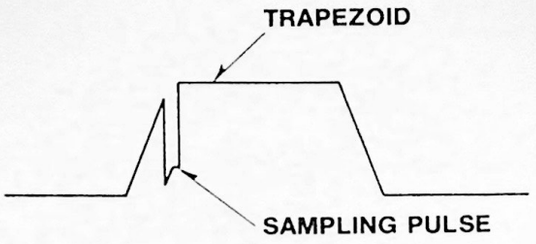

Figure 29. SP/LP Mode Free-Run

LP Mode Capstan Motor Free-Running Speed
(Figures 24, 28, 29)

(Preferred Procedure)
This adjustment locks the capstan servo to the system signals and maintains proper capstan speed in the LP-mode.

Note: Before making this adjustment, confirm that the SP Capstan Free-Run control (R215) is properly adjusted.

1. Place instrument in "LP-Record" mode.
2. Connect channel-1 scope probe (2V/div.; 5 ms/div.) to TP 205 (Servo Board).
3. Connect channel-2 scope probe (10V/div.) to TP 206 (Servo Board).
4. Adjust LP capstan free-run control on (R6429) SP/LP Circuit Board until sample pulse (TP 206) falls approximately on the center of the trapezoid's leading edge.
5. Set VTVM to .5 VDC scale center-zero position.
6. Connect VTVM to TP 207 and TP 208.
7. Re-adjust R6429 for 0V (center scale) indication.

Note: Loss of vertical sync and a very noisy picture may result with R6429 misadjusted.

LP Mode Capstan Motor Free-Running Speed
(Alternate Procedure)

1. Play back a known good LP-mode tape.
2. Set VTVM to .5 VDC scale and center-zero position — connect to TP 207 and TP 208 (Servo Board).
3. Adjust R6429 for 0V (center scale) indication.

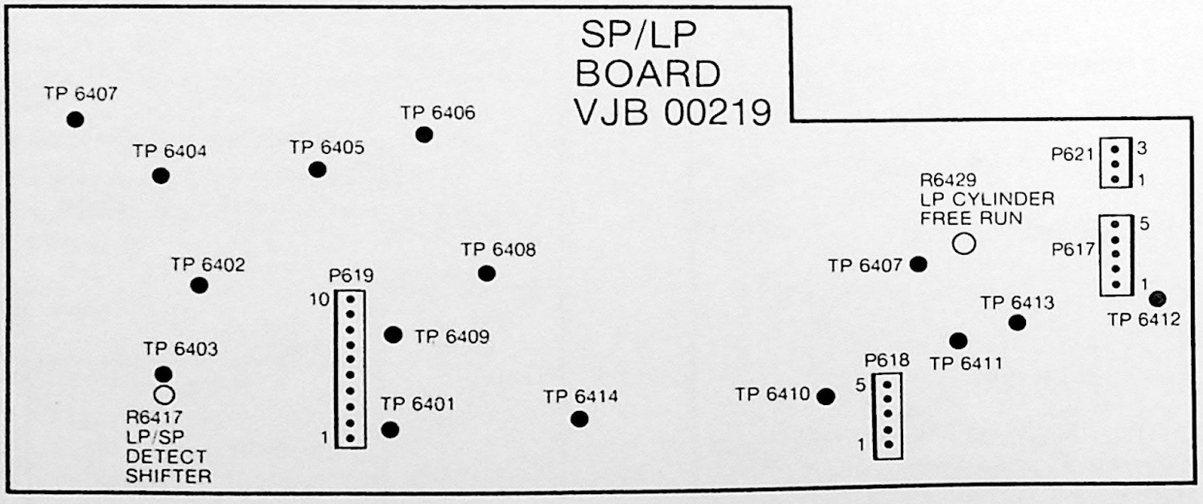

Figure 28. SP/LP Board

ELECTRICAL ADJUSTMENTS (continued)

SP/LP Detect Shifter (Figures 28, 30, 31)

1. Load instrument with test tape and play back monoscope signal.
2. Connect channel-1 scope probe (5V/div.; 10 ms/div.) to TP 6403 (SP/LP Circuit Board).
3. Adjust SP/LP detect control (R6417) so that the pulse width "T" is 25 ms ±3 ms.
4. Connect scope lead to TP 6404 and confirm the pulse width "T" is 25 ms ±6 ms.

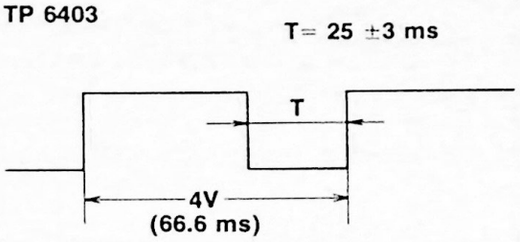

Figure 30. SP/LP Detect Shifter (MMV-1)

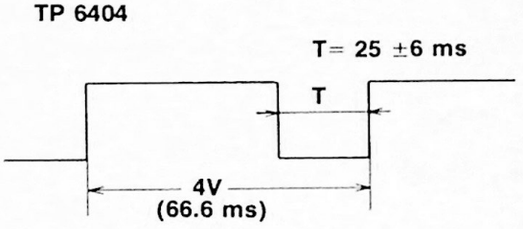

Figure 31. SP/LP Detect Shifter (MMV-2)

Audio Bias Trap (Figures 32, 33)

1. Place the TUNER/CAMERA switch in the Camera position — no signal.
2. Insert a blank tape and make SP-mode recording.
3. Connect channel-1 scope probe (.1V/div.; 2 ms/div.) to TP 402 (Audio Board). Connect scope ground to chassis. **Do not use ground stake on Audio Board.**
4. Adjust L404 for minimum leakage (less than 100 mV p-p).

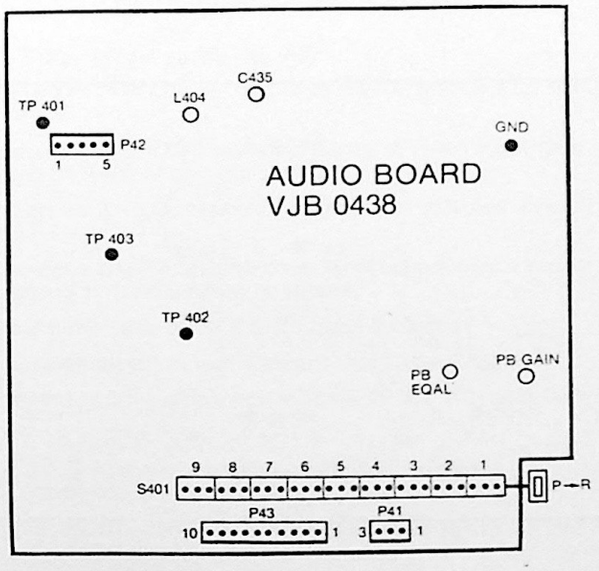

Figure 32. Audio Board

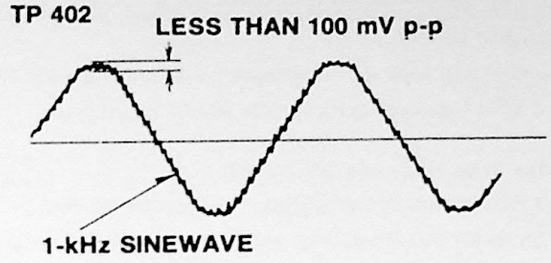

Figure 33. Audio Bias Trap

Bias Current (Figures 32, 34)

1. Connect a VTVM or scope across the Audio Control (A/C) head as shown in Figure 34.
2. Insert a blank tape and make SP-mode recording.
3. Adjust C435 (Audio Board) for the optimum value shown in the table below.

Note: Three different types of Audio Control (A/C) Heads may be used in this instrument.

A/C Head marked in Green = 1.0 mV ±.05 mV rms (2.8 mV p-p)

A/C Head marked in Yellow = 1.2 mV ±.05 mV rms (3.4 mV p-p)

A/C Head marked in Brown = 1.4 mV ±.05 mV rms (4.0 mV p-p)

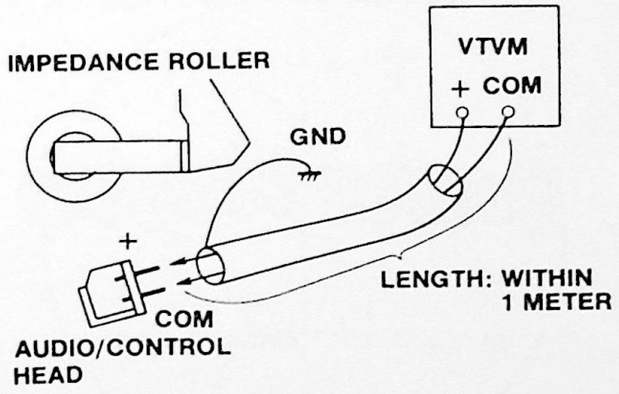

Figure 34. Bias Current

Dummy Coil Adjustment (Figures 24, 34)

1. Connect the VTVM, as shown in Figure 34.
2. Play back the recording just made for "Bias Current Adjustment."
3. Place the instrument in the "Audio-Dub" mode.
4. Adjust dummy coil L201 (Servo Board) so that the output from the Audio Control (A/C) head matches the voltage table given above.

Playback Equalizer (Figure 32)

1. Connect channel-1 scope probe (.5V/div.; .2 ms/div.) to TP 401 (Audio Board).
2. Insert test tape and playback monoscope signal (6-kHz tone).
3. Adjust playback equalizer control (R404) for 2V p-p.

ELECTRICAL ADJUSTMENTS (continued)

Playback Gain (Figure 32)

1. Connect channel-1 scope probe (.5V/div.; .5 ms/div.) to TP 401 (Audio Board).
2. Insert test tape and play back multiburst signal (1-kHz tone).
3. Adjust playback gain control (R405) for 2V p-p.

Audio Trap (Figures 35, 36, 37)

1. Turn instrument "on" without a cassette loaded.
2. Short TP 609 (Regulator and Transport Board) to ground.
3. Place instrument in "Play" position.
4. Hold the record safety link back (see exploded view, item 165, pages 6-3 and 6-4) and press the AUDIO-DUB button down.
5. Connect channel-1 scope probe (20 ms/div.; 5 ms/div.) to TP 511 (FM Modulator Record and Head Amp Board).
6. Adjust L513 for minimum bias leakage.

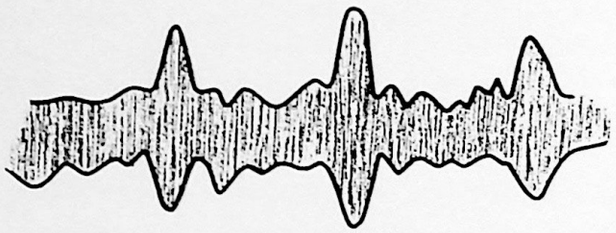

Figure 35A. L513 Misadjusted



Figure 35B. L513 Adjusted Correctly

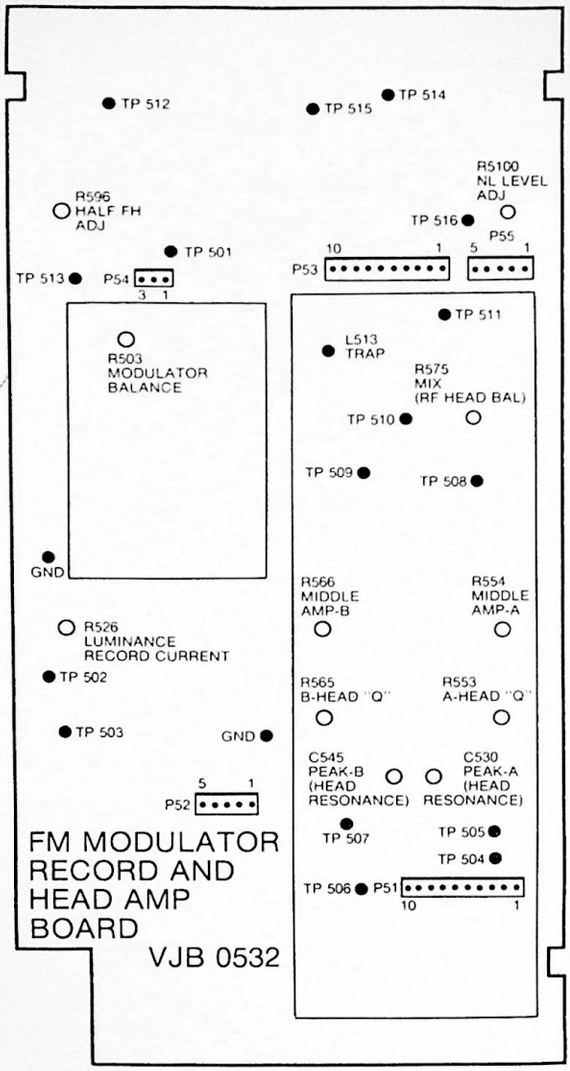

Figure 37. FM Modulator Record and Head Amp Board

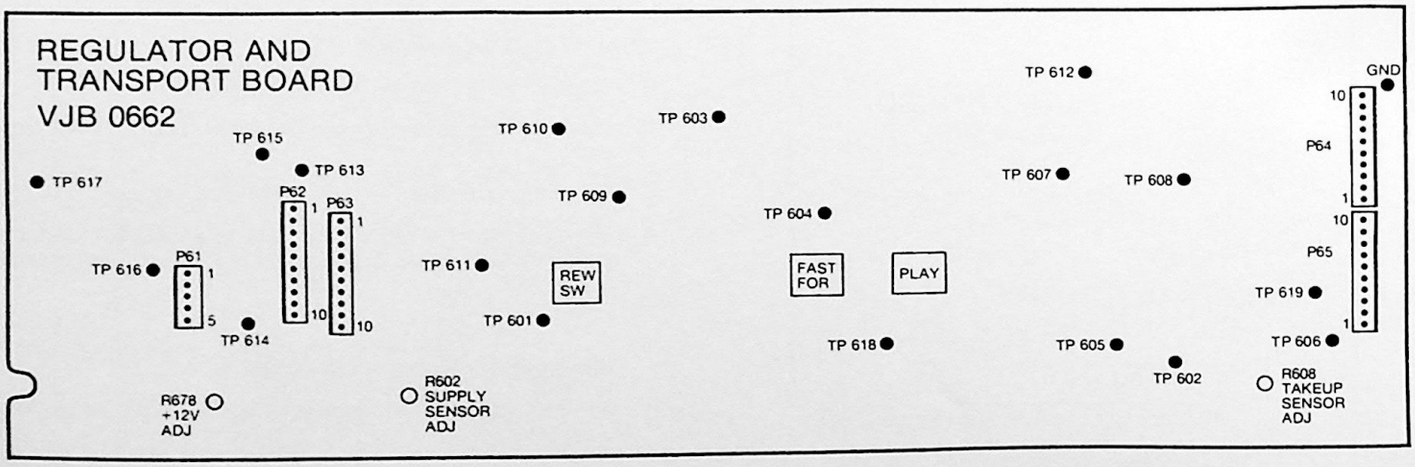

Figure 36. Regulator and Transport Board

ELECTRICAL ADJUSTMENTS (continued)

E-E Video Level (Figures 26, 38)

1. Connect video generator to video-input jack located on rear of instrument.
2. Place TUNER/CAMERA switch in "Camera" position.
3. Connect channel-1 scope probe (1V/div.; 20 μs/div.) to TP 308 (Luminance Board).
4. Place instrument in "Stop" mode.
5. Adjust E-E level control (R3169) for 2V ±.05V p-p.

Playback Video Level (Figur 26, 38)

1. Insert test tape and play ba ‹ color bar‹.
2. Connect channel-1 scope probe (1V/div.; 10 μs/div.) to TP 308 (Luminance Board).
3. Adjust video-level control (R3167) so that sync tip to white level amplitude is 2V p-p.

Playback Chroma Level (Figures 26, 38)

1. Insert test tape and playback color bars.
2. Connect channel-1 scope probe (1V/div.; 10 μs/div.) to TP 308 (Luminance Board).
3. Adjust chroma-level control (R3170) so that the amplitude of the yellow bar equals peak white.

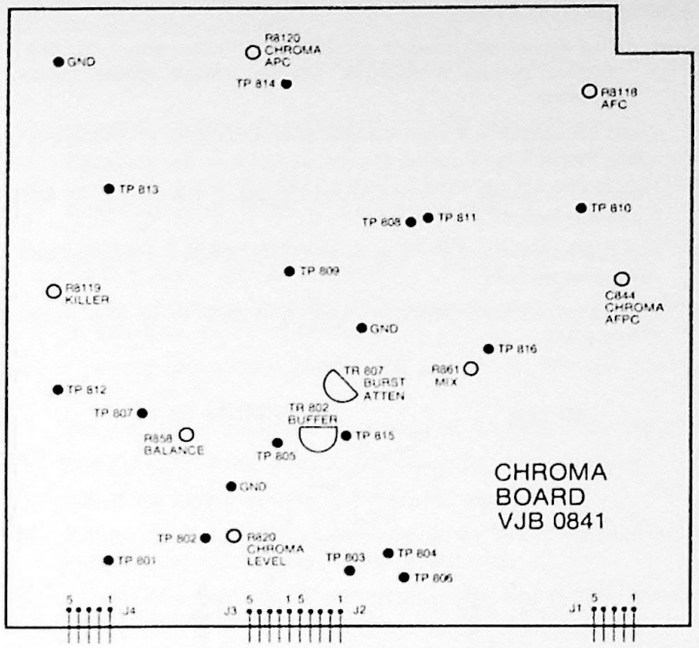

Figure 39. Chroma Board

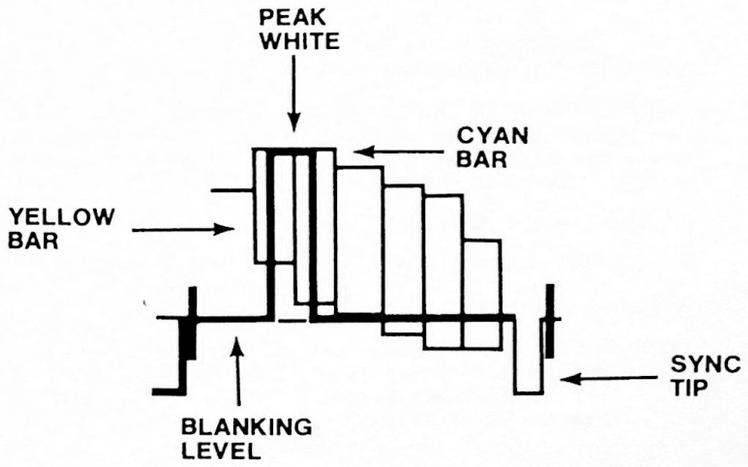

Figure 38. Composite Video

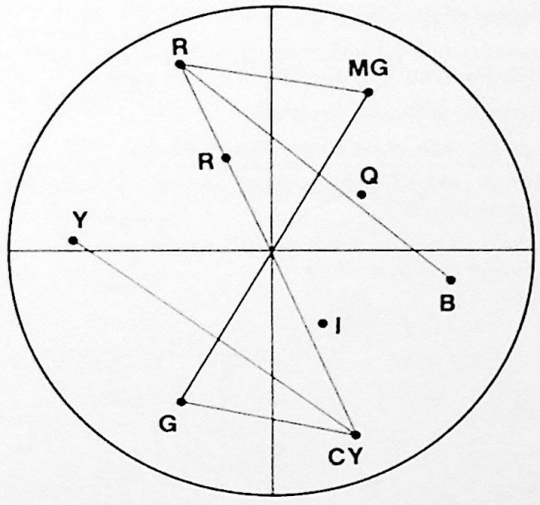

Comb Filter (Figures 26, 39, 40)

(Preferred Procedure — requires Vectorscope and NTSC Generator)

1. Apply full-field NTSC colorbar signal to video input jack located on the rear of the instrument.
2. Connect a .047-μF capacitor from TP 805 (Chroma Board) to ground.
3. Connect a .01-μF capacitor from TP 301 (Luminance Board) to the base of TR 807 (Chroma Board).
4. Ground the base of TR 802 (Chroma Board).
5. Place instrument in the "Camera" and "Stop" modes.
6. Connect vectorscope video input to TP 802 (Chroma Board).
7. External trigger from:

   TP 301 (if scope is a negative sync-trigger type).
   TP 808 (if scope is a positive sync-trigger type).
8. Adjust the mix control (R861) so that the levels of Ra and Rb are equal amplitude.
9. Alternately adjust T804 and T805 so that Ra and Rb fall on R.

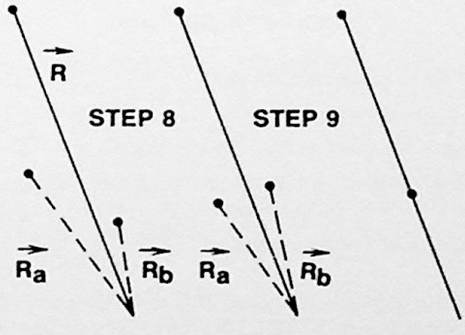

Figure 40. Comb Filter

ELECTRICAL ADJUSTMENTS (continued)

Comb Filter
(Alternate Procedure)

Note: The phase adjustment of T804 and T805 cannot be performed in this procedure. **Do not adjust these transformers.**

1. Load the instrument with a blank tape and make LP-mode colorbar recording.
2. Connect channel-1 scope probe (.2V/div.; 5 μs/div.) to TP 806 (Chroma Board).
3. Playback colorbars and adjust the TRACKING control (R6301) for **worst** picture.
4. Adjust mix control (R861) for minimum beat in TP 806 signal (Figure 41).

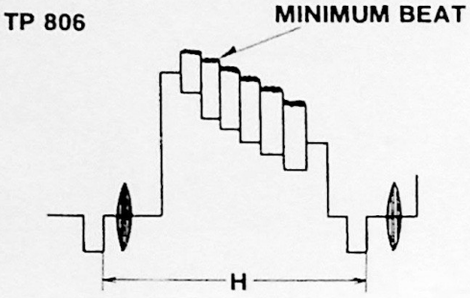

Figure 41. Mix Control

2-μs Pulse (Figures 39, 42)

The following two (2) adjustments lock the 2.517-MHz voltage-controlled oscillator (VCO) with horizontal sync.

1. Tune in a local color program.
2. Place the instrument in the "Stop" mode.
3. Connect channel-1 scope probe (2V/div.; .5 μs/div.) to TP 811 (Chroma Board).
4. Adjust 2-μs pulse control (R8107) so that pulse width is 1.5 μs as shown in Figure 42.

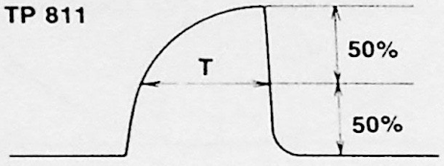

T= 1.5 ±0.5 μs

Figure 42. 2-μs Pulse

2.517-MHz AFC (Figures 39, 43)

1. Tune in a local color program.
2. Place the instrument in the "Stop" mode.
3. Connect channel-1 scope probe (.5V/div.; 10 μs/div; 10 × mag.) to TP 810 (Chroma Board).
4. Connect channel-2 scope probe (2V/div.) to TP 811 (Chroma Board).
5. Display both signals on scope. Adjust AFC control (R8118) to place sample pulse (TP 811) 5.5 μs from break point of TP 810 waveform as shown in Figure 43.

Note: Loss of color or vertical bar at left or right side of picture may result when R8118 is misadjusted.

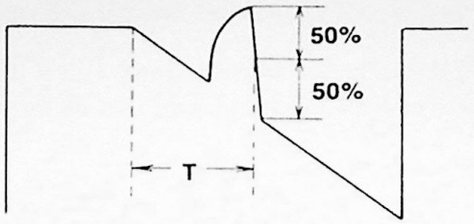

T= 5.5 ±0.5 μs

Figure 43. AFC Control

3.58-MHz Variable Crystal Oscillator APC (Figure 39)

1. Apply **B/W** video signal to the video input jack located on the rear of the instrument or tune in a local B/W program.
2. Connect 4.7 μF, 16V electrolytic capacitor between TP 813 (Chroma Board) and ground.
3. Connect frequency counter to TP 814 (Chroma Board).
4. Place instrument in the "SP-Record" mode.
5. Slowly adjust APC control (R8120) so that the frequency at TP 814 reads 3.579545 MHz ±20 Hz.

3.58-MHz Crystal Oscillator (Figure 39)

This oscillator is the reference for the up-conversion of chroma during playback. It is also counted down to 60 Hz and used as the direct-drive cylinder-motor servo reference signal to maintain constant 1800 R.P.M. headwheel speed.

1. Place instrument in "Stop" mode.
2. Connect frequency counter probe to TP 809 (Chroma Board).
3. Adjust C844 to read 3.579545 MHz ±10 Hz.

Note: If C844 is misadjusted, color sync problems may occur and in extreme cases the 60-Hz signal would be incorrect and cause servo lock problems. C844 must be adjusted from the top of the board.

Color Killer (Figures 26, 39)

1. Apply colorbar signal to the video input jack.
2. Connect a 22-ohm resistor in parallel with R3135 (Luminance Board).
3. Connect VTVM to TP 812 (Chroma Board).
4. Insert a blank tape and place instrument in the "SP-Record" mode.
5. Preset color-killer control (R8119) fully counterclockwise. Slowly advance control clockwise until the color-killer "unkills" — meter reads approximately 9 volts.
6. Remove 22-ohm resistor.

Chroma Modulator Balance (Figures 39, 44)

1. Insert blank tape and place instrument in the "SP-Record" mode and record off-the-air signal.
2. Connect channel-1 scope probe (.5V/div.; 10 μs/div.) to TP 805 (Chroma Board).
3. Adjust modulator balance control (R858) for minimum carrier leakage.

ELECTRICAL ADJUSTMENTS (continued)

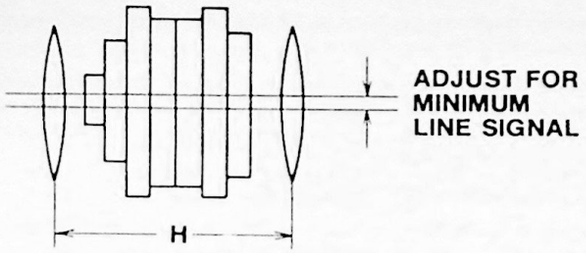

Figure 44. Modulator Balance

3.58-MHz Trap (Figures 45, 47)

1. Apply colorbar signal to video input jack located on the back of the instrument.
2. Place the TUNER/CAMERA switch in the "Camera" position.
3. Insert a blank tape and place the instrument in the "SP-Record" mode.
4. Connect channel-1 scope probe (.5V/div.; 10 μs/div.) to TP 303 (Luminance Board).
5. Adjust T302 for minimum carrier leakage in TP 303 signal.

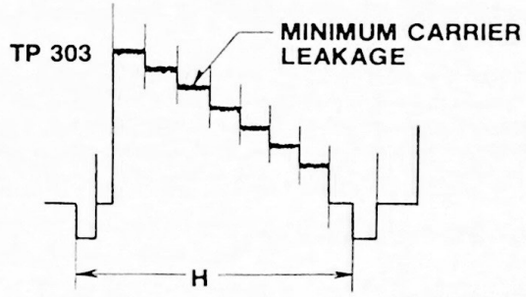

Figure 45. 3.58-MHz Trap

Record Nonlinear Emphasis (Figures 37, 46)

1. Apply luminance-step or window signal to the video input jack located on the back of the instrument.
2. Place TUNER/CAMERA switch in the "Camera" position.
3. Insert blank tape and place instrument in the "SP-Record" mode.
4. Connect channel-1 scope probe (1V/div.; 20 μs/div.) to TP 514 (FM Modulator Record and Head Amp Board).
5. Adjust nonlinear level control (R5100) for 3V ±.1V p-p.
6. Move scope lead to TP 516 and confirm that signal amplitude is 1.2V ±.2V p-p in both "SP" and "LP" modes.

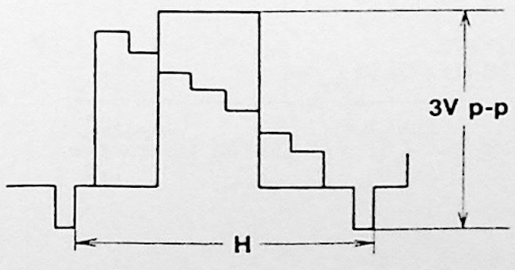

Figure 46. Nonlinear Level Control

FM-Modulator and Video Clippers

(Preferred Procedure)

1. Jumper pins 1 and 8 of connector P33 (Luminance Board, Figure 47).
2. Ground the base of TR 820 (Chroma Board, Figure 39).
3. Connect network (1K resistor in series with .047 μF capacitor — Figure 48) from TP 503 (FM Modulator Record and Head Amp Board) to TP 304 (Luminance Board).
4. Connect a signal generator to TP 304 through network (1K resistor and a .047 μF capacitor — Figure 48).
5. Apply luminance-step signal to the video input jack located on the back of the instrument.
6. Connect the scope (2V/div.; 10 μs/div.) to TP 307 (Luminance Board).
7. Set the signal generator frequency to 3.4 MHz ±50 kHz.
8. Set TUNER/CAMERA switch to the "Camera" position.
9. Place the instrument in "SP-Record" mode.
10. Adjust the sync tip frequency control (R3164) for minimum beat at sync tip of video signal (Figure 49).

Note: Use minimum signal-generator input signal that allows observation of beat.

11. Change the signal generator frequency to 4.4 MHz ± 50 kHz.
12. Adjust the deviation control (R3161) for minimum beat at peak white level of signal (Figure 50).
13. Remove networks and jumper.
14. Adjust white clip control (R3162) to limit white overshoot to 165% (Figure 51).
15. Adjust dark clip control (R3163) to limit black overshoot to 145% (Figure 51).

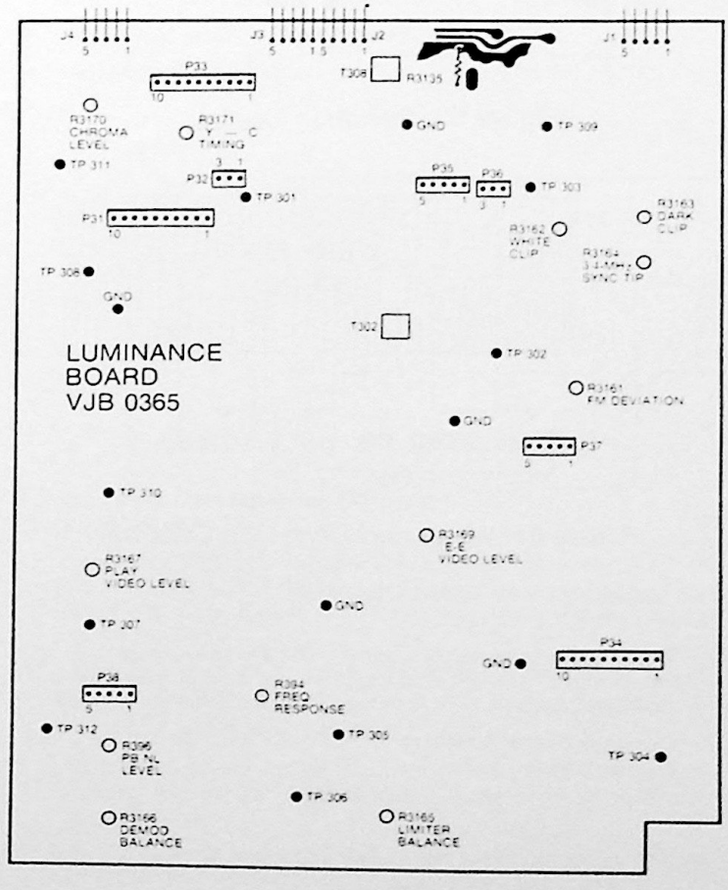

Figure 47. Luminance Board

ELECTRICAL ADJUSTMENTS (continued)

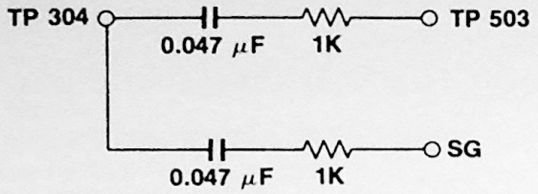

Figure 48. Isolating Network

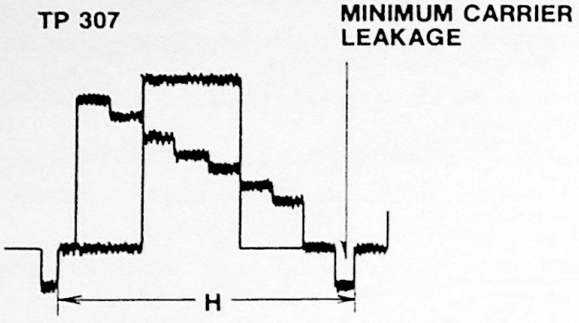

Figure 49. Sync Tip Frequency Control

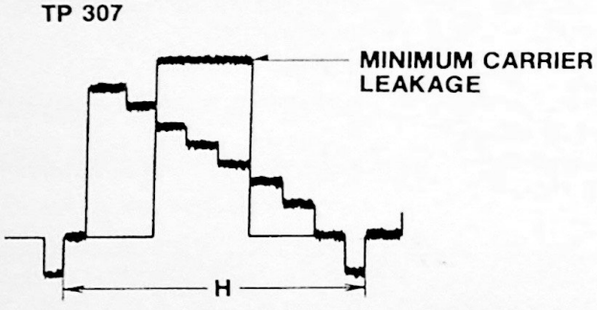

Figure 50. Deviation Control

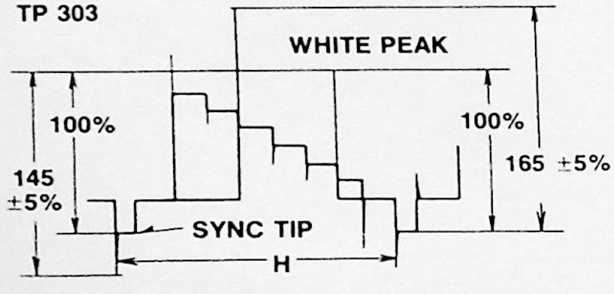

Figure 51. White and Dark Clip Controls

FM Modulator and Video Clippers
(Alternate Procedure)

1. Apply luminance-step or superpulse (window) signal to the video input jack located on the rear of the instrument — **TUNER/CAMERA** switch in the "Camera" position.
2. Connect scope probe to TP 303 (.5V/div.; 10 us/div.), DC-coupled mode.
3. Connect positive lead of 100 uF, 16V capacitor to IC 301 pin 3 (located on Luminance Board), negative lead to ground.
4. Connect frequency counter to TP 502 (FM Modulator Record and Head Amp Board, Figure 37).
5. Preset dark-clip control (R3163) to full counterclockwise, white-clip control (R3162) to full clockwise and deviation control (R3161) to midrange. All controls are located on the Luminance Board, Figure 47).
6. Place instrument in the "SP-Record" mode.
7. Adjust sync tip frequency control (R3164) for a counter reading of 4.4 MHz +50 kHz. As R3164 is adjusted, the scope trace should move "up" from its initial position.
8. Use scope vertical position control to position trace on center scale horizontal graticule line. Do this very carefully.
9. Now adjust sync tip frequency control (R3164) for a counter reading of 3.4 MHz +50 kHz. **Do not disturb scope setting** — scope trace will move "down".
10. Disconnect grounding capacitor and adjust deviation control (R3161) to place video white level on previously determined graticule line.
11. Adjust **scope** vertical gain so that "sync tip" to "white level" amplitude is exactly two graticule divisions — video signal is equal to 100%.
12. Adjust white clip control (R3162) to limit overshoot to 165% (Figure 51).
13. Adjust dark clip control (R3163) to limit overshoot to 145% (Figure 51).
14. To confirm the above adjustments, remove all test equipment and make a monochrome recording of a high contrast scene or super pulse (window) signal. Playback the tape just recorded and look for evidence of beats in the picture or over modulation (streaks of black following white objects).

FM Carrier Interleave (Half FH)
(Figures 37, 47, 52)

1. Apply luminance-step or super pulse (window) signal to video input jack located on rear of instrument.
2. Place TUNER/CAMERA switch in the "Camera" position.
3. Connect channel-1 scope probe (.5V/div.; 10 us/div.) to TP 303 (Luminance Board).
4. Connect channel-2 scope probe (1V/div.) to TP 513 (FM Modulator Record and Head Amp Board) — TP 513 signal has twice the amplitude of TP 303 video signal.
5. Insert blank tape and place instrument in "LP-Record" mode.
6. Adjust FM carrier interleave control (R596) so that the amplitude of the squarewave signal (TP 513) is equal to the video-signal amplitude at TP 303 (Figure 52).

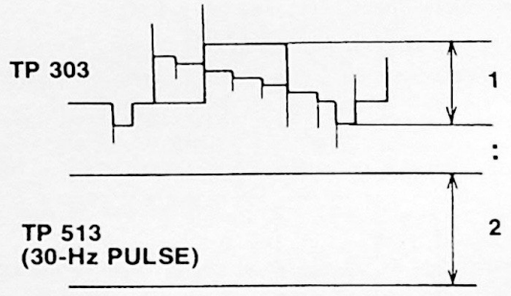

Figure 52. FM Carrier Interleave

ELECTRICAL ADJUSTMENTS (continued)

FM Modulator Balance (Figures 37, 53)
(Preferred Procedure)

1. Apply color bar signal into the video input jack located on the rear of the instrument.
2. Connect an electrolytic capacitor (4.7 uF,16V) from TP 501 (FM Modulator Record and Head Amp Board) to ground.
3. Connect channel-1 and channel-2 scope leads to TP 502. Invert the phase of channel-2. Set the scope triggering mode to "normal" position and monitor the waveform in the ALT-sweep mode.
4. Place the instrument in the "SP-Record" mode.
5. Adjust the Modulator Balance Control (R503) so that the two waveforms are in phase.

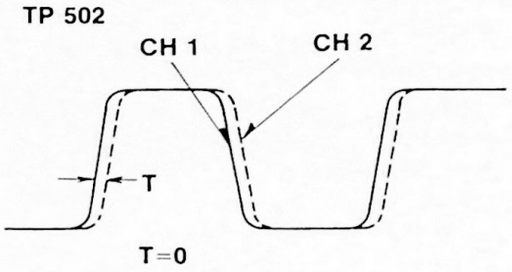

Figure 53. FM Modulator Balance

FM Modulator Balance
(Alternate Procedure)

1. Apply luminance-step or super-pulse (window) signal into the video input jack located on the rear of the instrument.
2. Place TUNER/CAMERA switch in the "Camera" position.
3. Connect channel-1 scope probe (.2V/div.; 5 us/div.) to TP 312 (Luminance Board, Figure 47).
4. Connect a 3300 ohm resistor and a .047 uF capacitor in series. Connect one end to TP 511 (FM Modulator Record and Head Amp Board, Figure 37) and the other end to TP 304 (Luminance Board).
5. Jumper pins 1 and 8 on connector P33 (Luminance Board).
6. Place instrument in "SP-Record" mode.
7. Adjust FM-modulator balance control (R503) for minimum beat in sync pulse (Figure 54).
8. Remove jumpers. Record a black and white signal and playback to confirm absence of beat interference on screen.

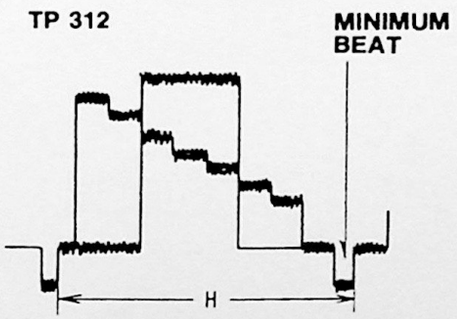

Figure 54. FM Modulator Balance

Chroma-Record Level (Figures 37, 39, 55)

1. Apply colorbar signal to the video input jack located on the back of the instrument.
2. Place TV/CAMERA switch in the "Camera" position.
3. Turn luminance record-current control (R526) located on the FM Modulator Record and Head Amp Board fully counterclockwise.
4. Connect channel-1 scope probe (20 mV/div.; 50 us div.) to TP 504 and scope ground lead to TP 505 (FM Modulator Record and Head Amp Board).
5. Place instrument in "SP-Record" and record color bars.
6. Adjust chroma level control (R820) located on Chroma Board to set the burst signal at 30 mV.

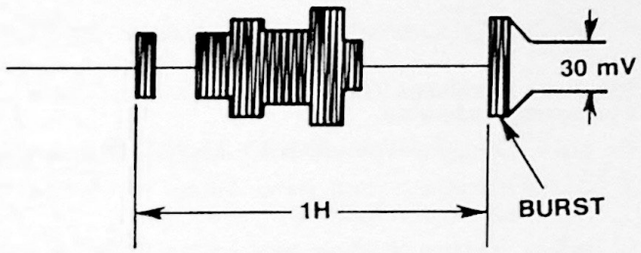

Figure 55. Chroma Record Level

Luminance Record Level (Figure 37, 56)

1. Place TV/CAMERA switch in the "camera" position — no input signal.
2. Connect channel-1 scope probe (20 mV/div.; 50 us/div.) to TP 504 and scope ground lead to TP 505 (FM Modulator Record and Head Amp Board).
3. Place instrument in "SP-Record" mode.
4. Adjust luminance record level control (R526) for 120 ±5 mV.

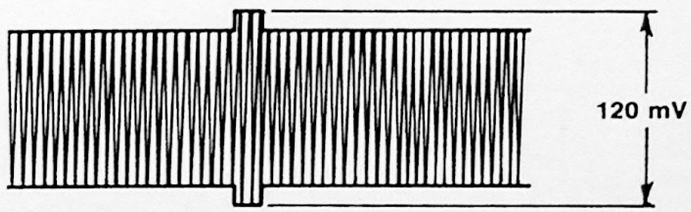

Figure 56. Luminance Record Level

Limiter and Demodulator Balance
(Figures 37, 47, 57)

1. Connect a 3300-ohm resistor and a .01-uF capacitor in series. Connect one end of network to TP 511 (FM Modulator Record and Head Amp Board) and the other end to TP 304 (Luminance Board).
2. Connect channel-1 scope lead (.2V/div.; 5 us/div.) to TP 312 (Luminance Board).
3. Insert test tape and playback the color bar signal.
4. Alternately adjust limiter balance (R3165) and demodulator balance (R3166) for minimum beat in the sync tip portion of the waveform.
5. Record a black and white signal and playback to confirm absence of beat interference on screen and at TP 312.

ELECTRICAL ADJUSTMENTS (continued)

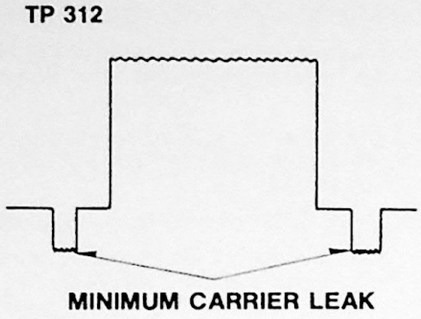

Figure 57. Limiter and Demodulator Balance

Playback Nonlinear Video Level and Frequency Response

1. Insert test tape in instrument and playback multiburst signal.
2. Connect channel-1 scope probe (.5V/div.; 10 us div.) to TP 312 (Luminance Board, Figure 47).
3. Adjust playback nonlinear level control (R396) for 1.2V p-p video signal.
4. Connect channel-1 scope probe to TP 308.
5. Adjust frequency response control (R394) so that the frequency response of the multiburst signal over the range of .5-MHz to 3-MHz meets the following standards (Figure 58).

   .5 MHz = 100%
   1 MHz = 100% to 80%
   2 MHz = 80% to 50%
   3 MHz = 63% to 30%

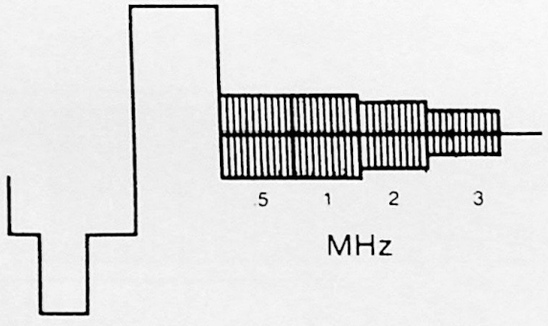

Figure 58. Multiburst Signal

Y-C Timing (Figures 47, 59)
(Preferred Procedure)

1. Playback colorbar signal of test tape.
2. Connect channel-1 scope probe (.5V/div.; 10 us/div.) to TP 311 (Luminance Board).
3. Connect channel-2 scope probe to TP 307 (Luminance Board).
4. Set the scope to the "chopped sweep" mode and expand the waveform to look at the green to magenta transition point.
5. Adjust the Y-C timing control (R3171) so that the luminance switching point and the green/magenta transition are coincident, Figure 59.

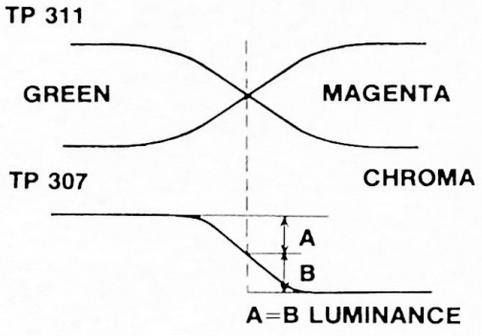

Figure 59. Y-C Timing

Y-C Timing
(Alternate Procedure)

1. Insert test tape and playback color bars.
2. Adjust Y-C timing control (R3171) located on the Luminance Board so that no phase delay or overlap occurs between the green and magenta color bars, Figure 60.

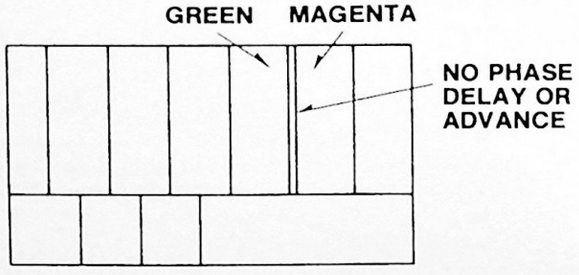

Figure 60 Y-C Timing

ELECTRICAL ADJUSTMENTS (continued)

Video IF Alignment
Preliminary

Allow minimum of 10 minute warm-up period for receiver and test equipment.
Use an isolation transformer and maintain line voltage at 120 VAC.
VHF Sweep Generator — providing 0 to 50-MHz output — 0 to 12-MHz sweep width with internal marker capability.

External Marker Generator — required if VHF Sweep Generator is not equipped with internal markers.
VTVM — Providing a 1.5-volt DC scale.
Oscilloscope
External Bias — Battery or well regulated, isolated AC operated variable DC bias supply (0 to 20V).

Instrument Preparation
Ground AGC point on the VHF tuner (junction of C31 and C763) with 4.7-uF capacitor.
Set the VHF tuner to the "U" position.
Connect sweep generator to TP 1 on the VHF tuner through a 75/100-ohm pad.
Connect +2V bias supply to TP 701 (Figure 61).
Connect scope through a 15K ohm resistor to TP 706 (Figure 60).
Adjust bias voltage to produce 1V p-p response curve.

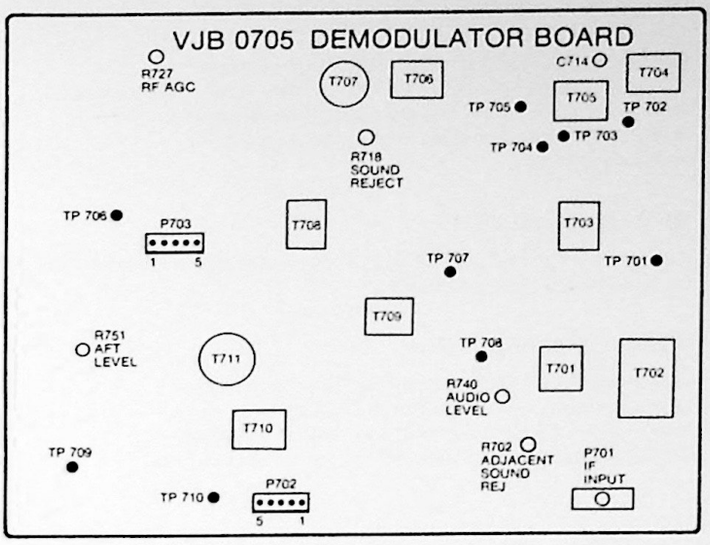

Figure 61. Demodulator Board

IF Alignment

Sweep Generator Coupling	Marker Generator Frequency	Oscilloscope Connection	Procedure
Thru 75/100 ohms pad to TP 1 on VHF Tuner	44MHz	Vert Input thru 15k to TP 706 (Figure 61)	Adjust L1 (VHF Tuner) for maximum gain
IF Interstage And IF Overall Alignment			
Thru 75/100 ohm pad to TP 1 on VHF Tuner	44MHz	Vert Input thru 15k resistor to TP 706 (Figure 61)	Adjust T706, T702, T703, T704, T705 and C714 for maximum gain (Figure 62).
	41.25MHz		Adjust T701 for minimum 41.25MHz marker
	47.25MHz		Adjust R702 for minimum 47.25MHz marker
	41.25MHz		Adjust T707 and R718 for minimum 41.25MHz marker.
	42.17MHz 45.75MHz		Check overall response curve, if necessary adjust T704, T705 and C714 slightly.

Automatic Fine Tuning (AFT) Alignment

Sweep Generator Coupling	Marker Generator Frequency	Oscilloscope Connection	Procedure
Thru a .01 capacitor to TP 705 (Figure 61)	45.75MHz	Vert Input direct to TP 709 (Figure 61)	Adjust T711 to place 45.75MHz marker as shown in Figure 63.
			Adjust T710 for maximum peak to peak amplitude (Figure 63).
			Connect VTVM to TP 709. Adjust R751 for 6.5VDC.

ELECTRICAL ADJUSTMENTS (continued)

Sound IF (Figures 61, 64)

Jumper TP 703 to TP 704.
Set the audio level control (R740) to midrange.
Connect sweep generator to TP 707 thru a .02-uF capacitor.
Connect scope to TP 708 thru a 0.22-uF capacitor.
Adjust T709 for maximum amplitude (Figure 64).
Remove jumper.

RF AGC (Figure 61)

Adjust RF AGC control (R727) to eliminate overloading or RF interference on strong signals.

Audio Level (Figure 61)

Place the TV/VCR switch in the "TV" position.
Adjust volume on TV for normal volume.
Place the TV/VCR switch in the "VCR" position.
Adjust audio level control (R740) for equal volume.

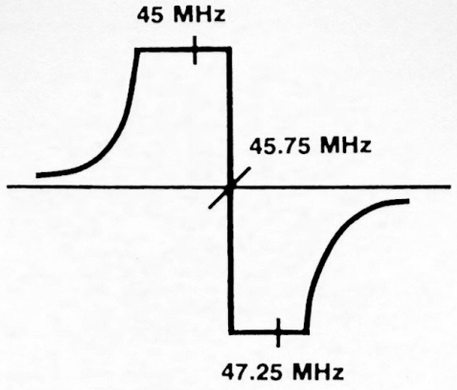

Figure 63. AFT Response Curve

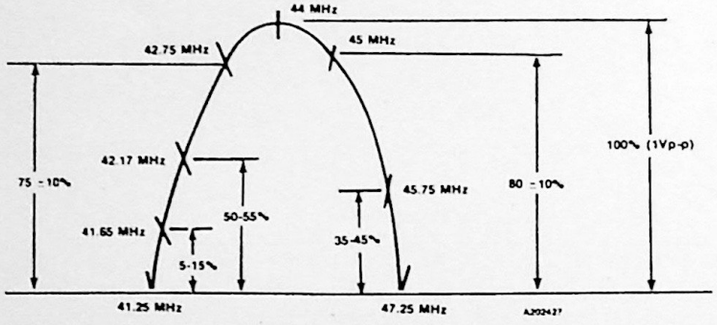

Figure 62. IF Overall Response Curve

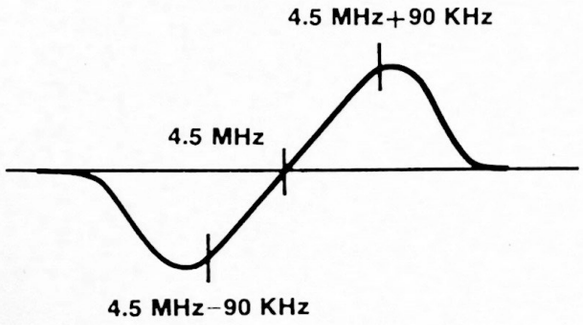

Figure 64. Sound IF Response Curve

COMPONENT BOARD LOCATION AND IDENTIFICATION

NOTE: Always Use Ground Stakes On Circuit Boards For Test Equipment Grounds.

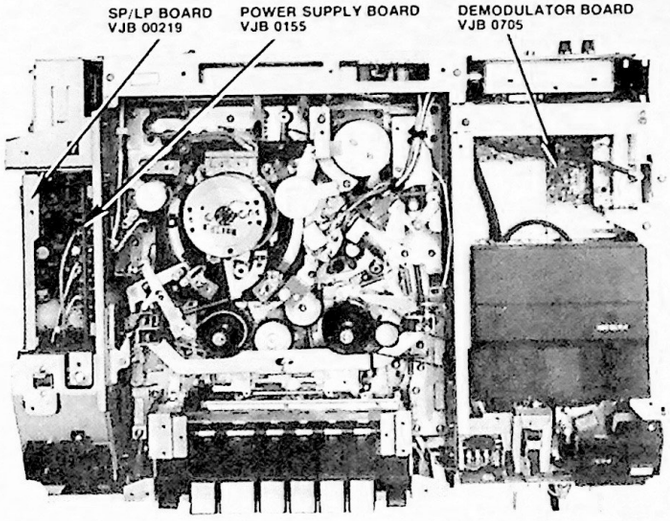

Figure 1. Top View

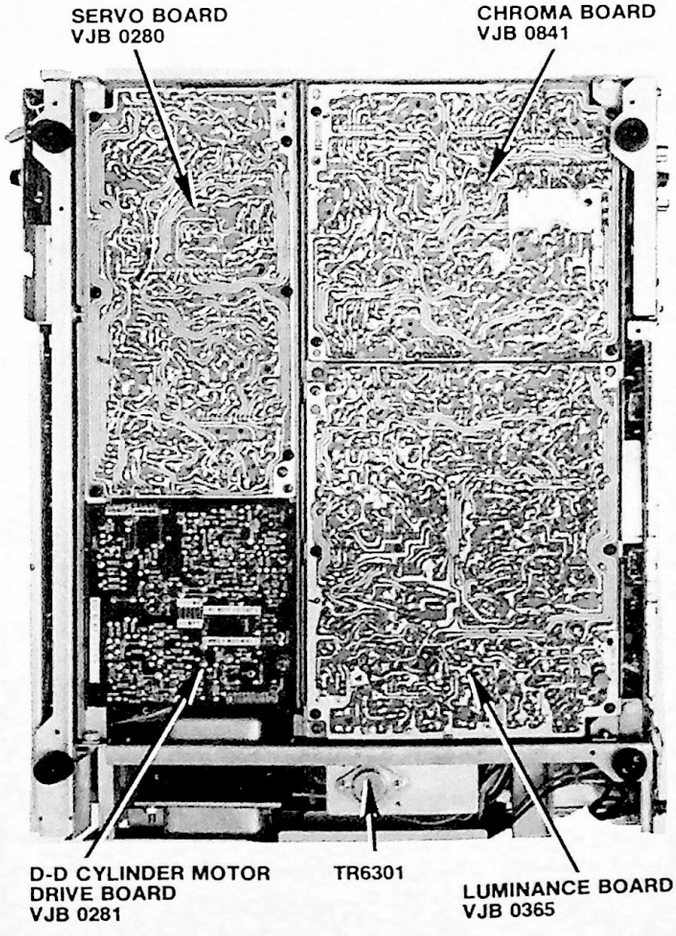

Figure 2. Bottom View

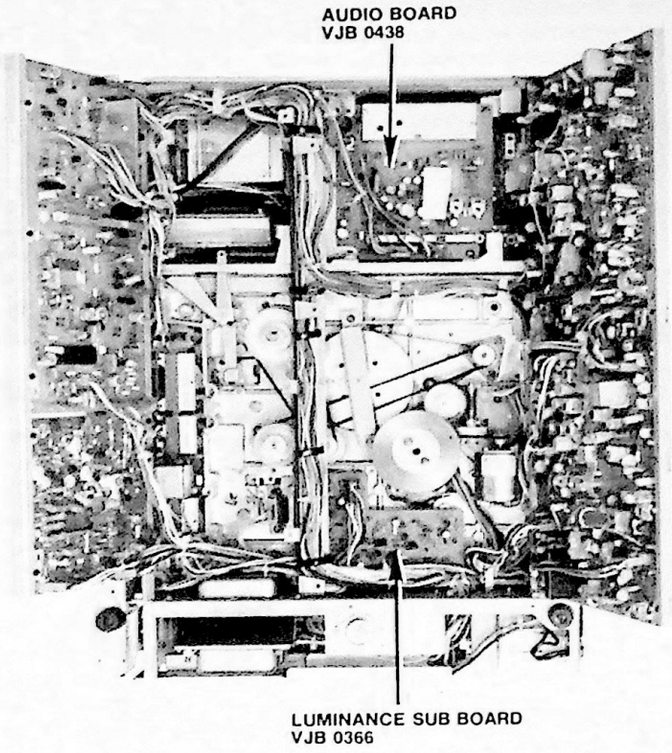

Figure 3. Bottom View (Panels Open)

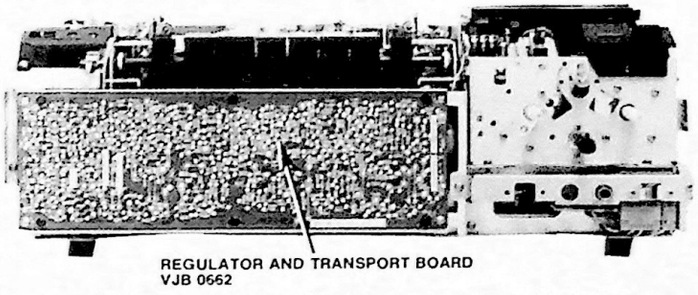

Figure 4. Front View

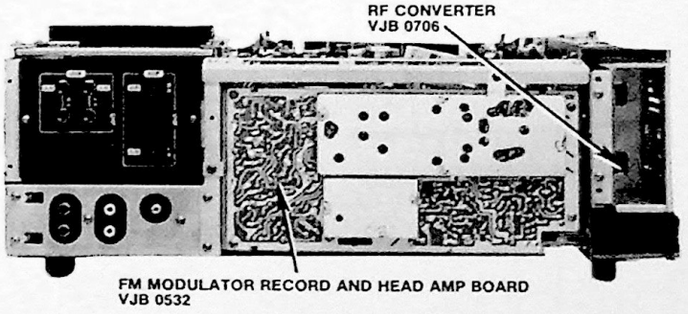

Figure 5. Back View

TRANSPORT BLOCK DIAGRAM

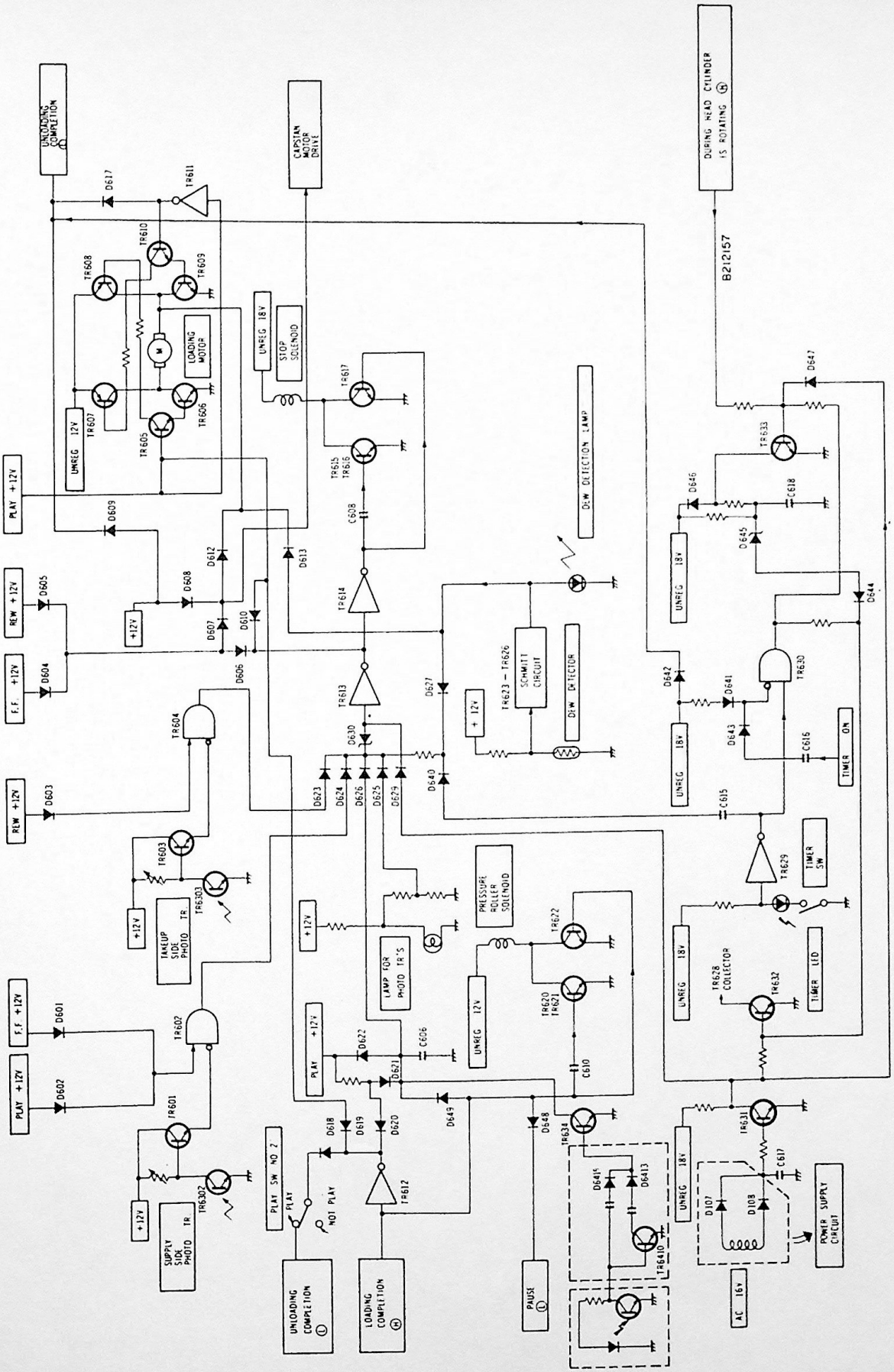

D.D. CYLINDER SERVO BLOCK DIAGRAM

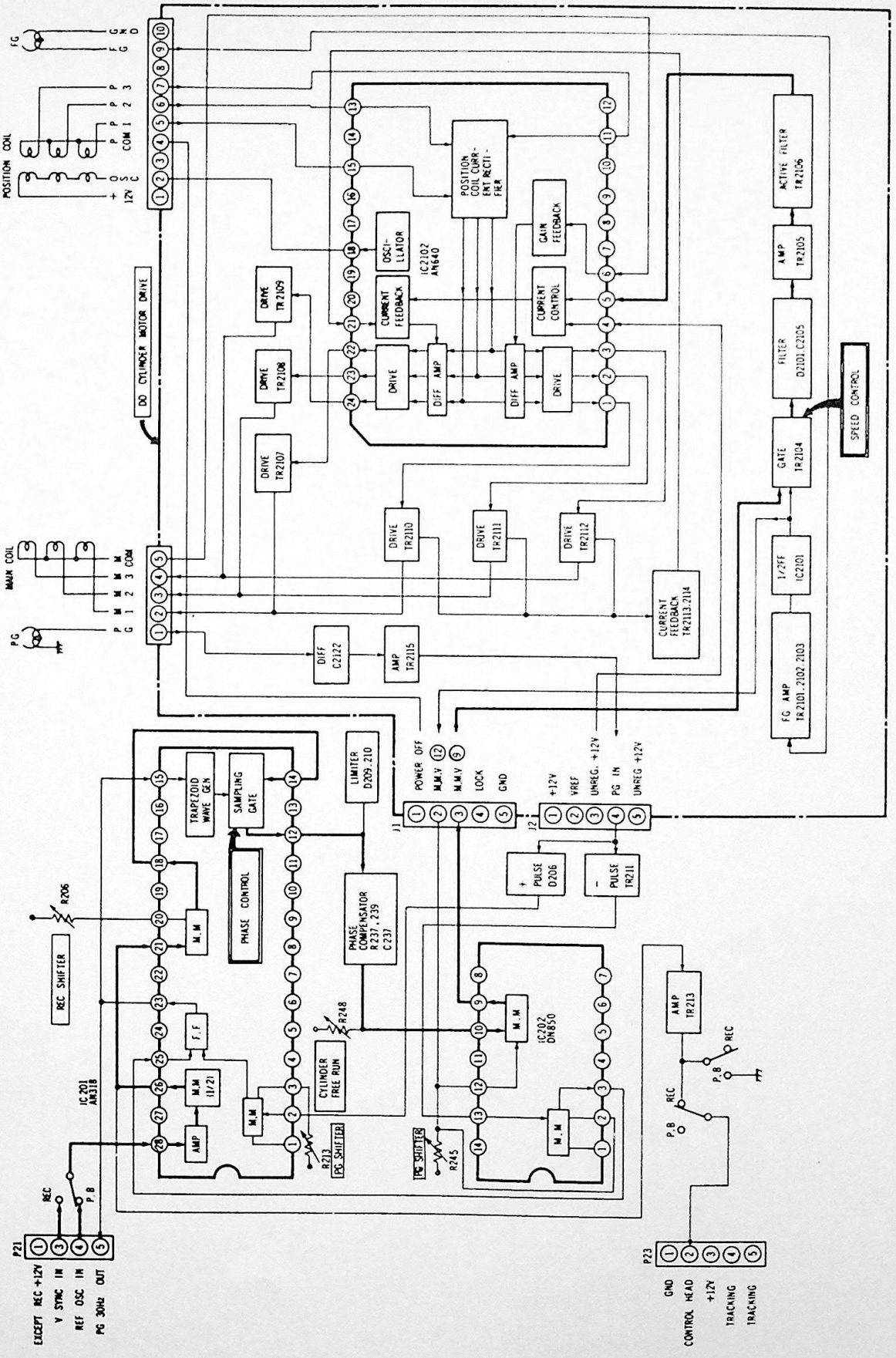

CAPSTAN SERVO BLOCK DIAGRAM

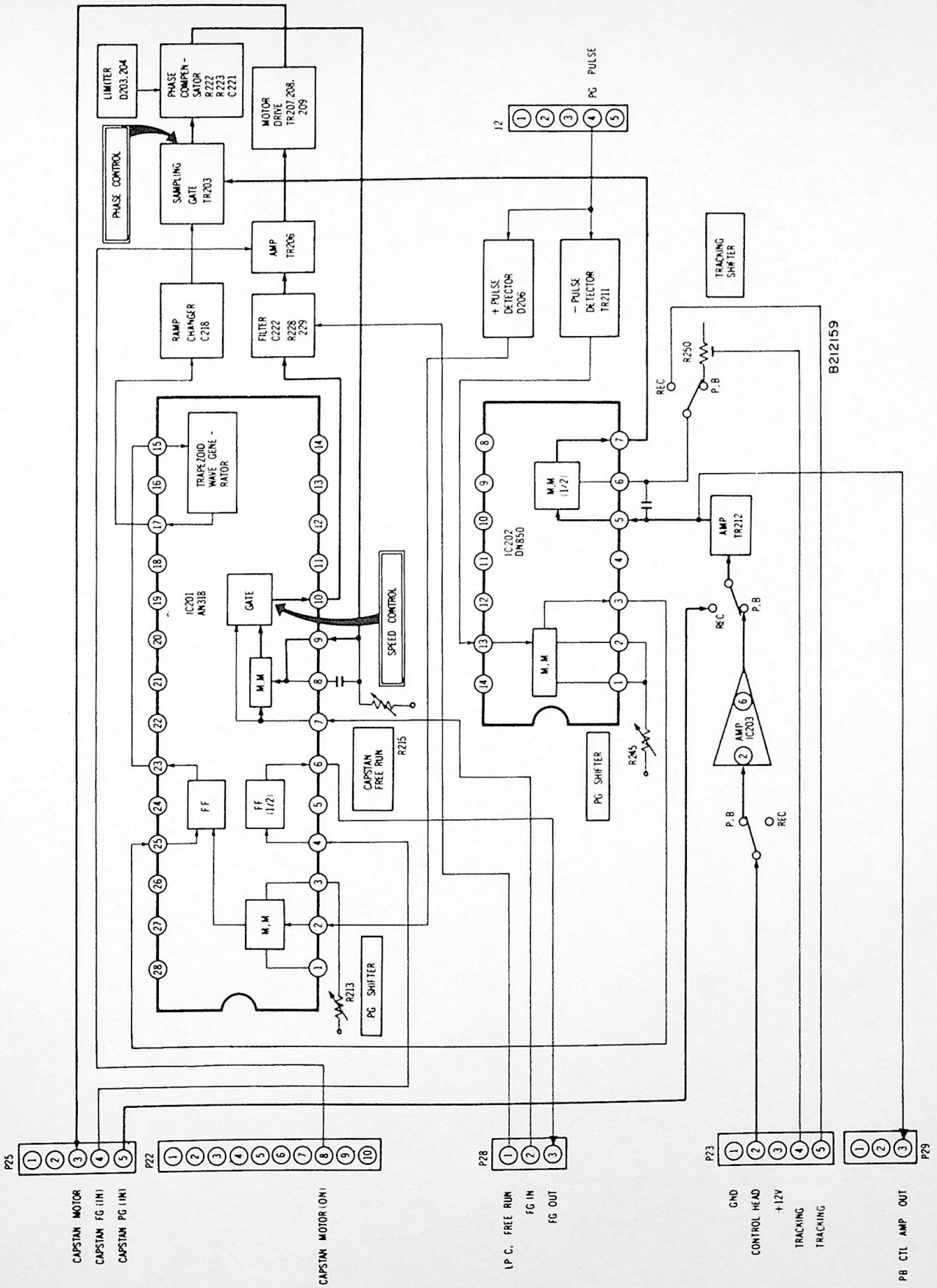

FM MOD. REC AND HEAD AMP BLOCK DIAGRAM

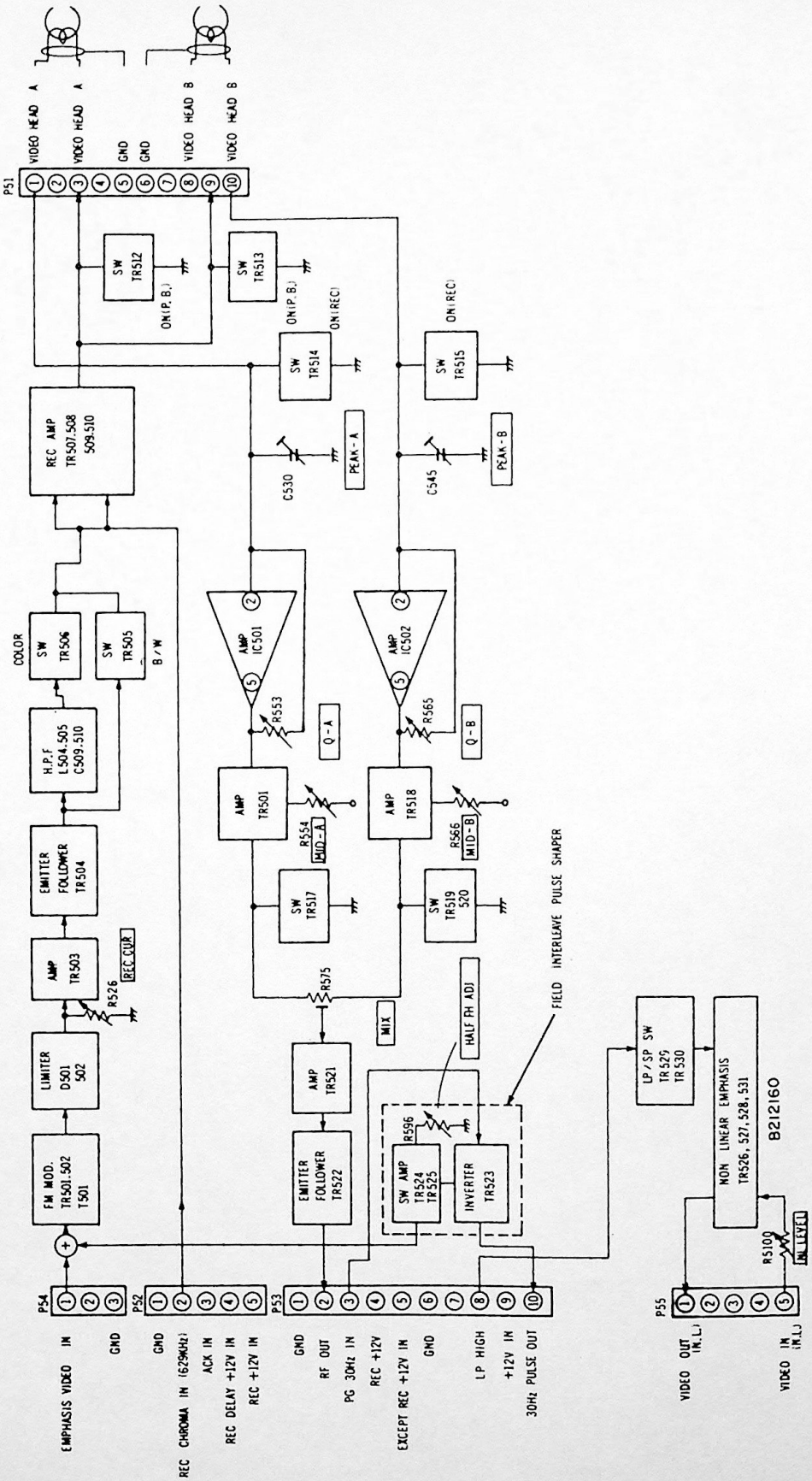

DEMODULATOR BLOCK DIAGRAM

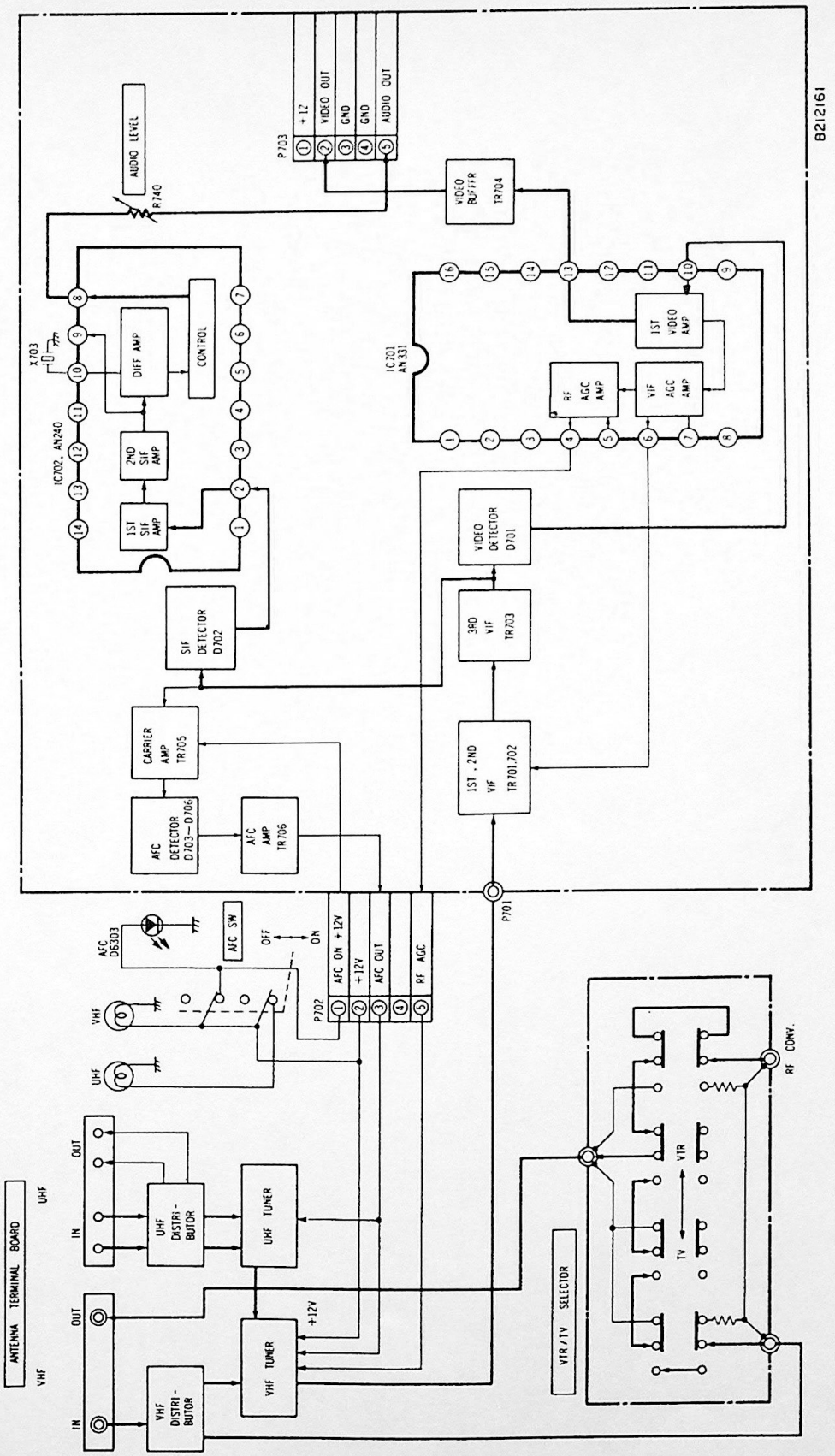

LUMINANCE PROCESS BLOCK DIAGRAM

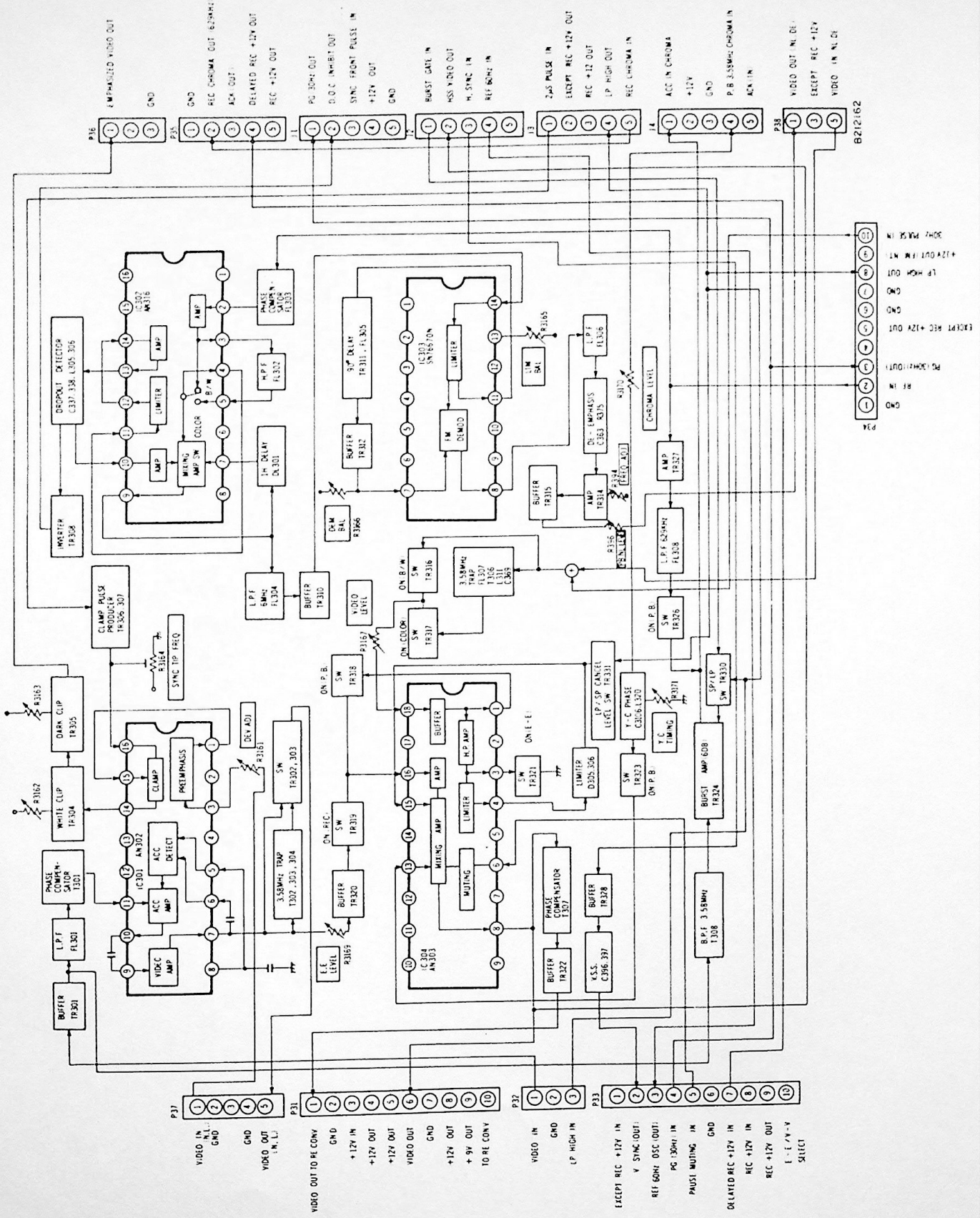

CHROMA PROCESS BLOCK DIAGRAM

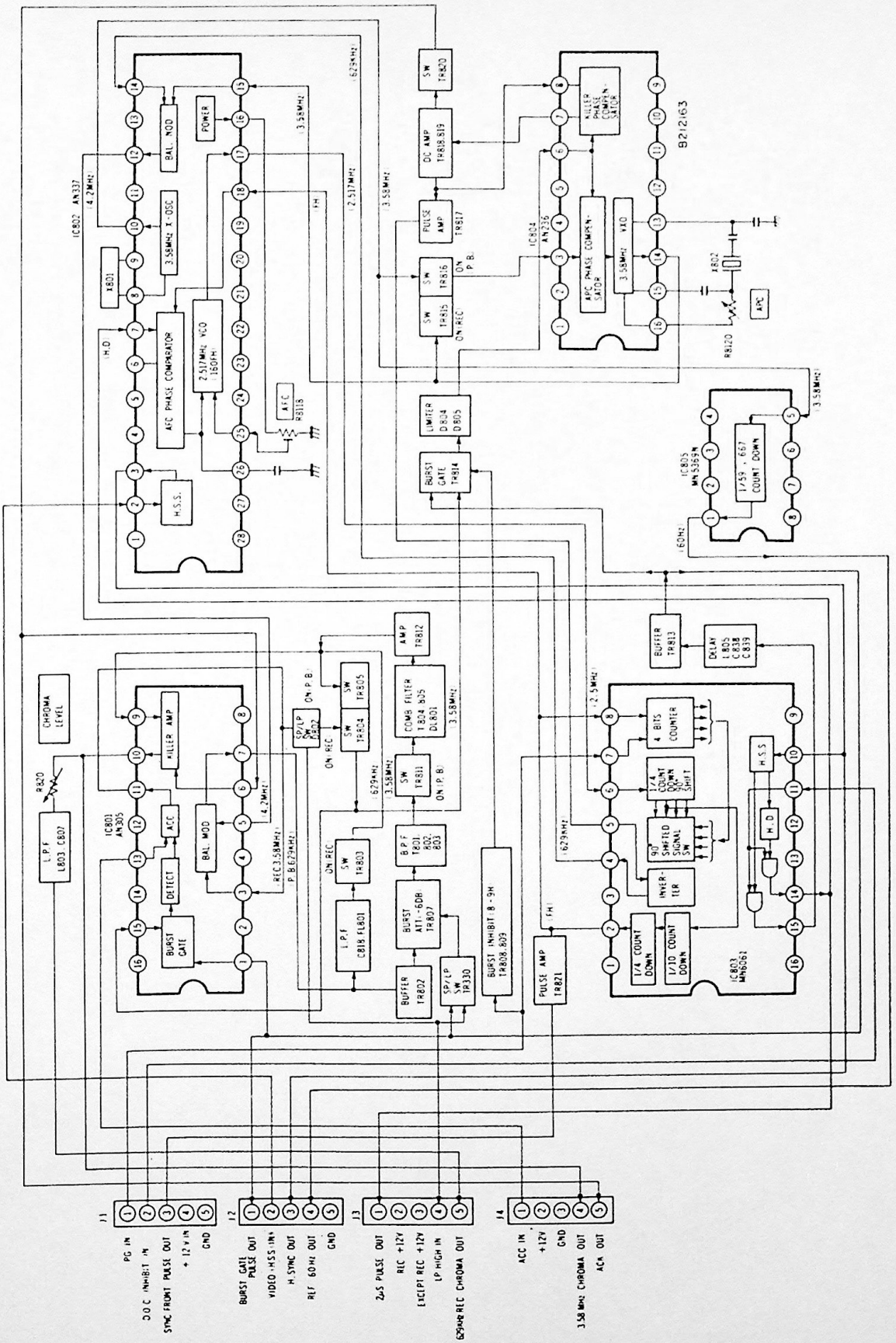

AUDIO BLOCK DIAGRAM

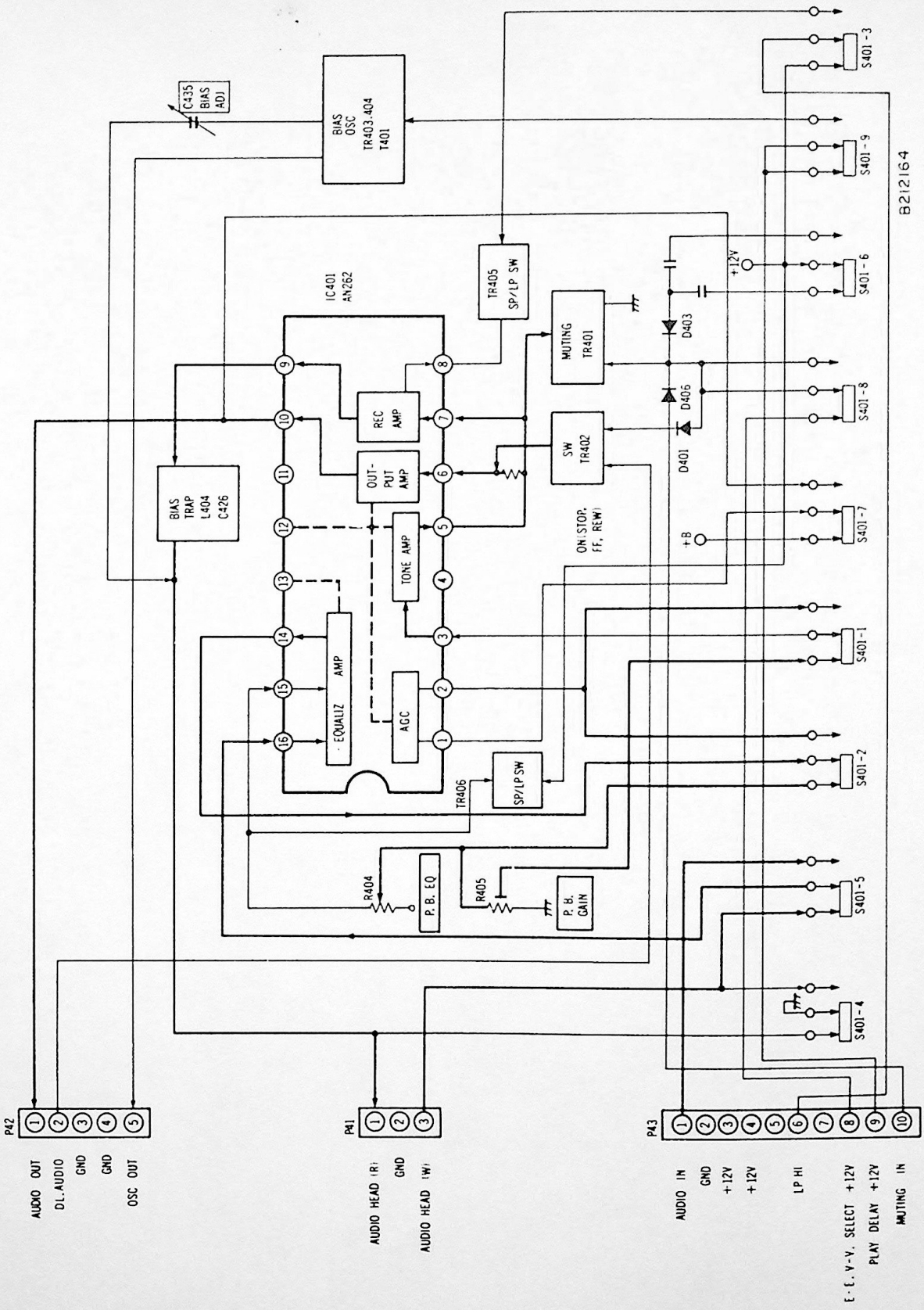

SIMPLIFIED SIGNAL CIRCUIT — PLAY POSITION

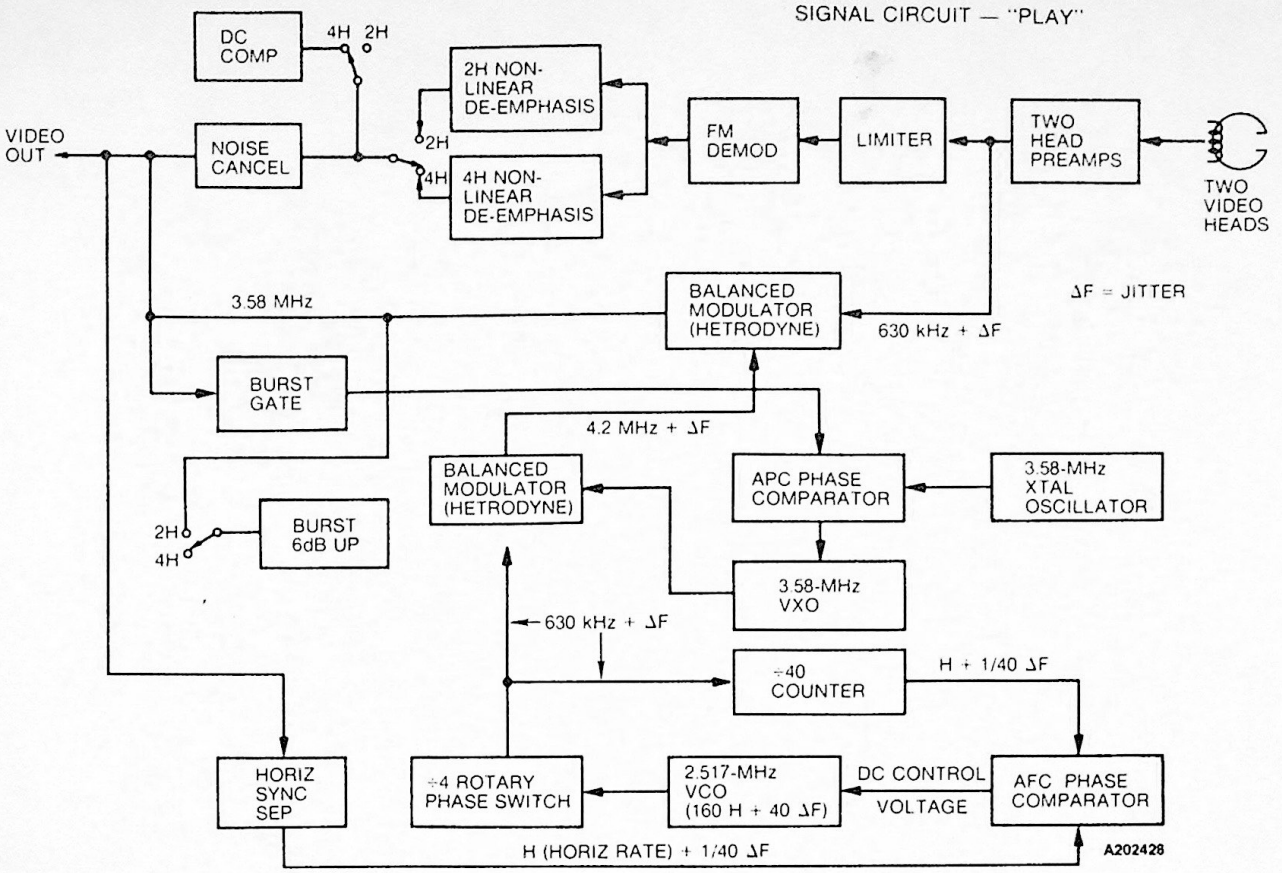

SIMPLIFIED SIGNAL CIRCUIT — RECORD POSITION

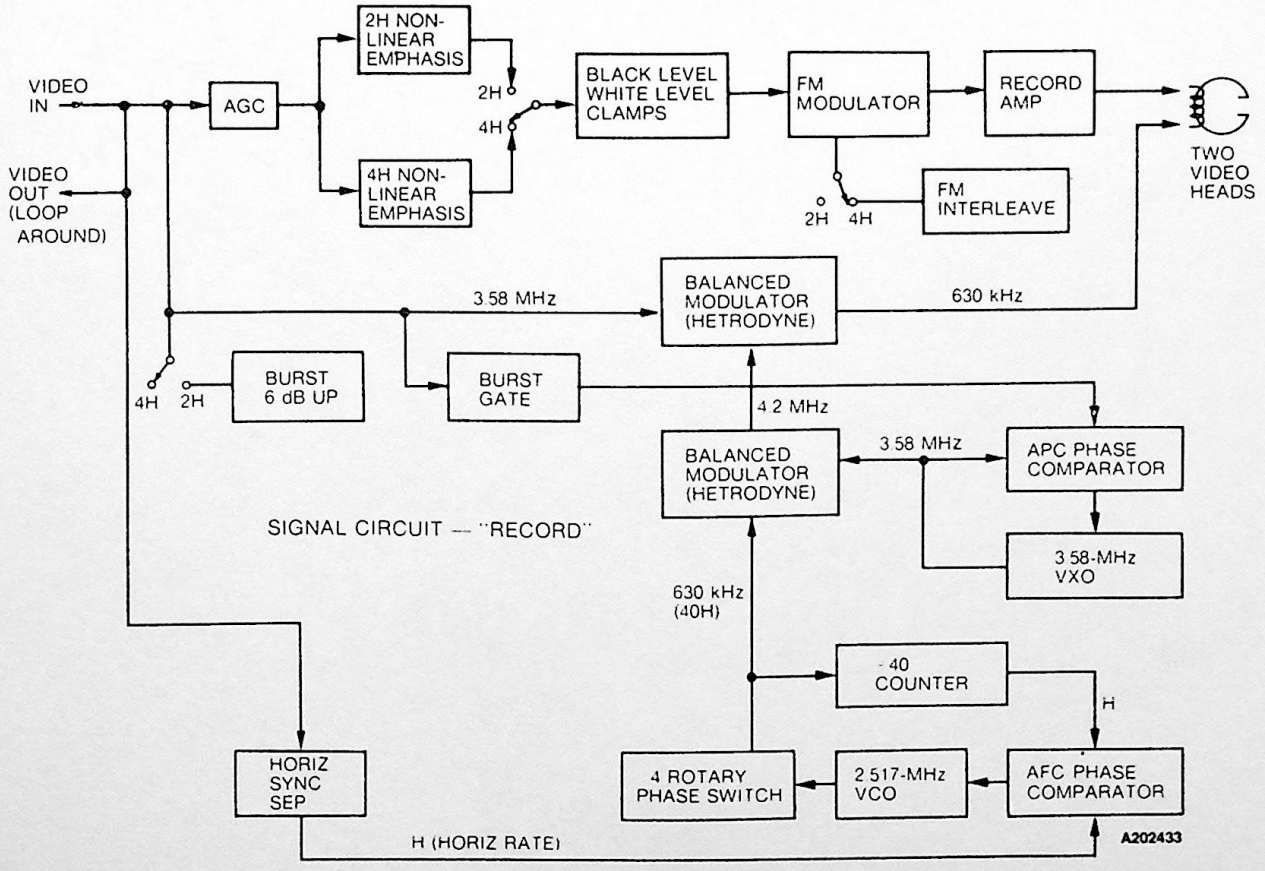

VHF TUNER SCHEMATIC

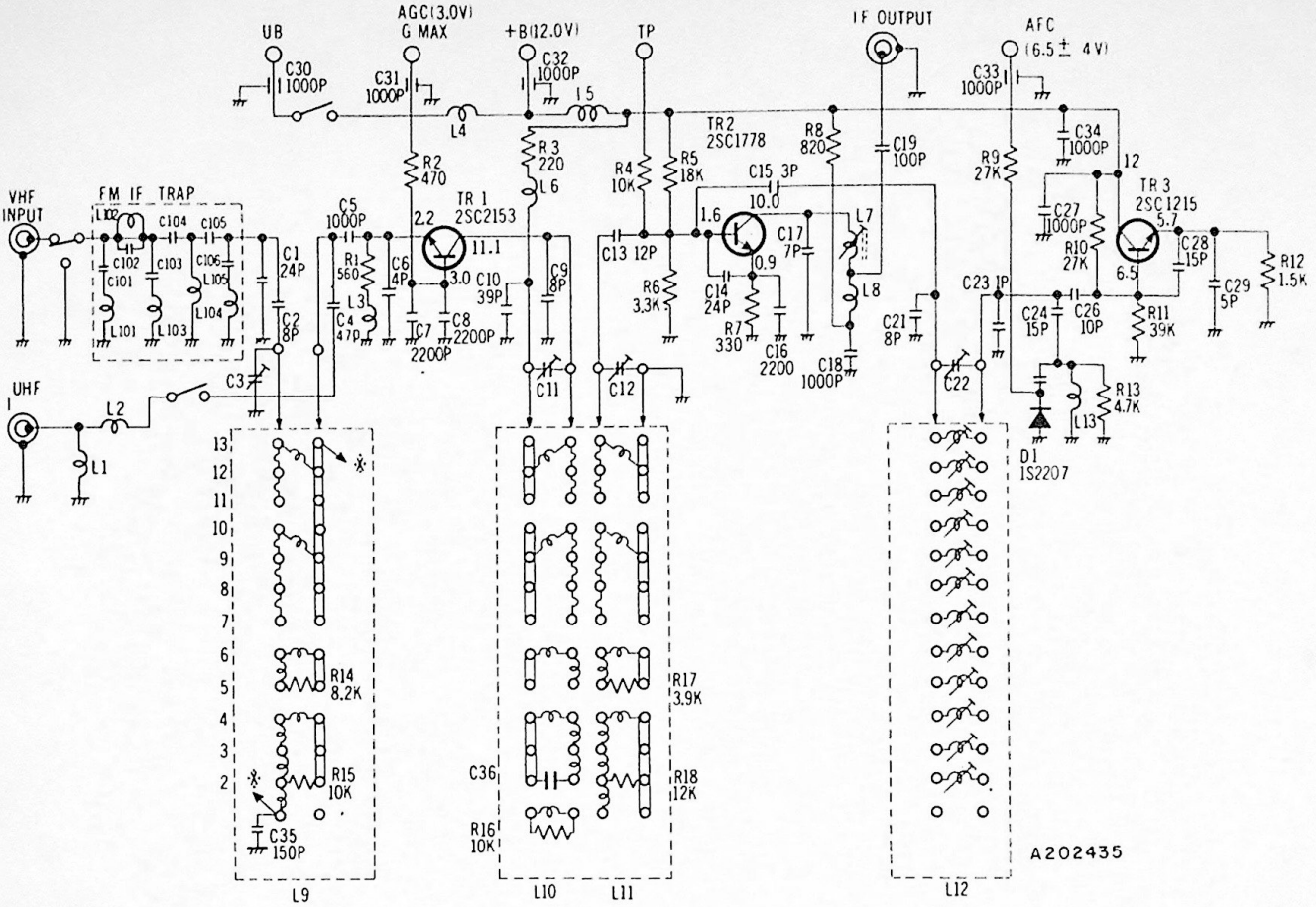

VHF TUNER CIRCUIT BOARD

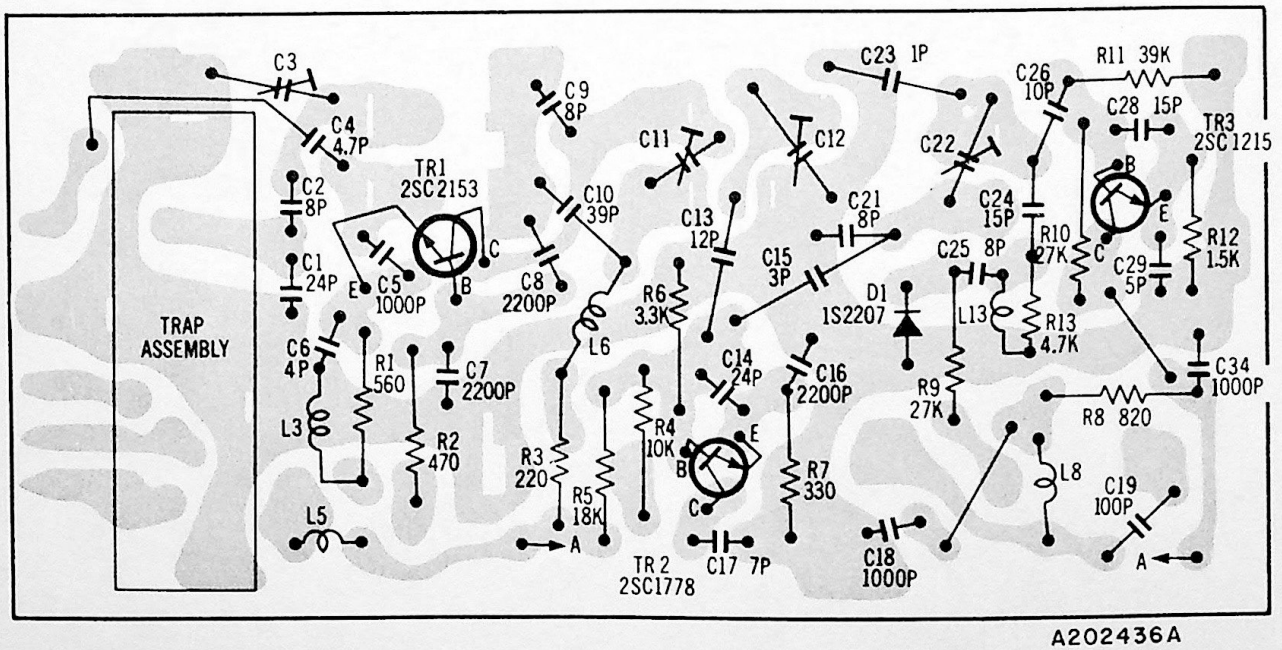

UHF TUNER SCHEMATIC

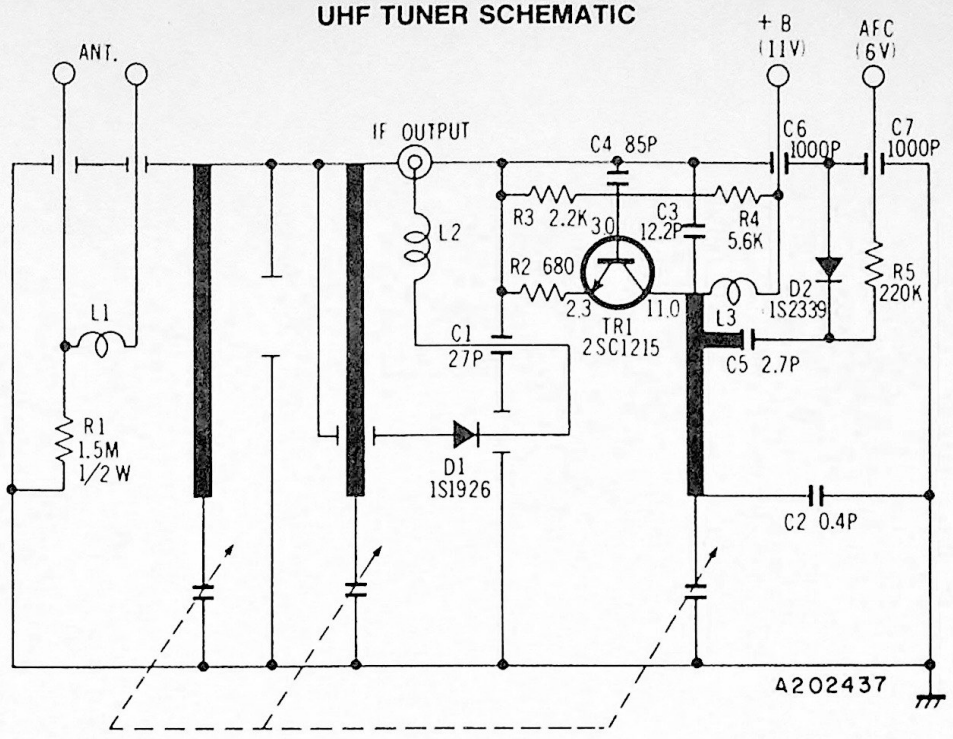

NOTES

※ R1 1.5MΩ ± 10%

※ C2, C3, C5 MAY CHANGE WITHIN ± 1PF FOR QUALITY IMPROVEMENT

SMALL CIRCUIT BOARDS

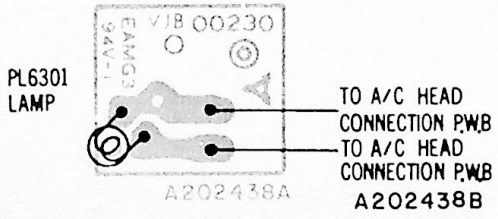

Lamp Connection Circuit Board

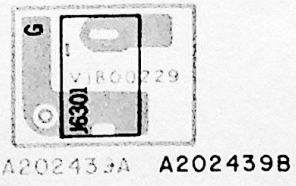

Remote Control Jack Connection Circuit Board

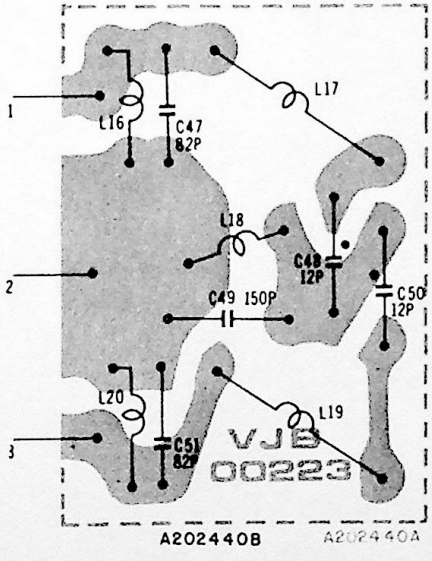

FL2 Band Pass Filter (R-F Converter)

SMALL CIRCUIT BOARDS
(continued)

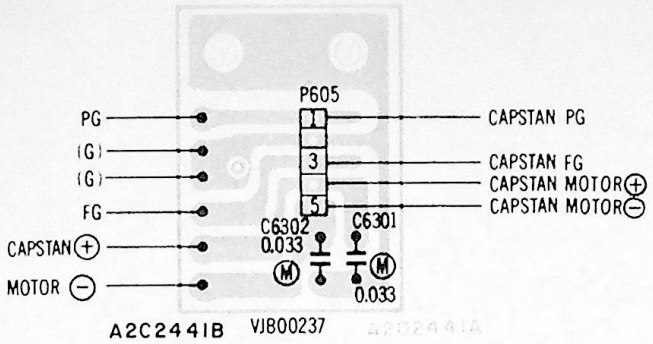

Capstan Motor Connection Circuit Board

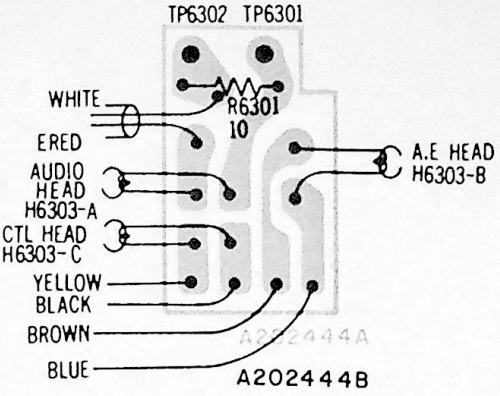

Audio Control Head Circuit Board

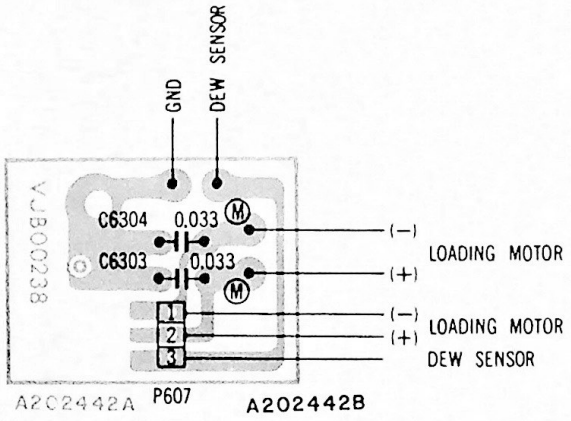

Loading Motor Circuit Board

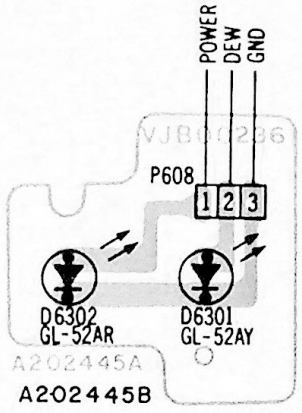

L.E.D. Circuit Board

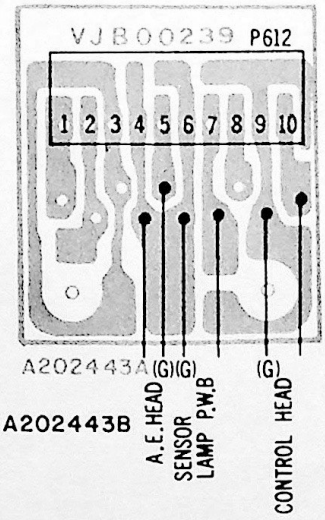

Audio Control Head Connection Circuit Board

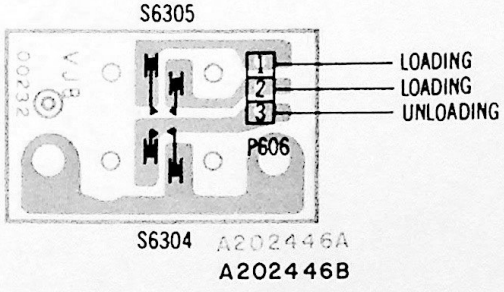

Leaf Switch Connection Circuit Board

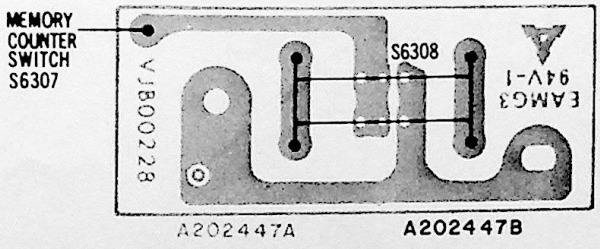

Memory Switch Connection circuit Board

SMALL CIRCUIT BOARDS
(continued)

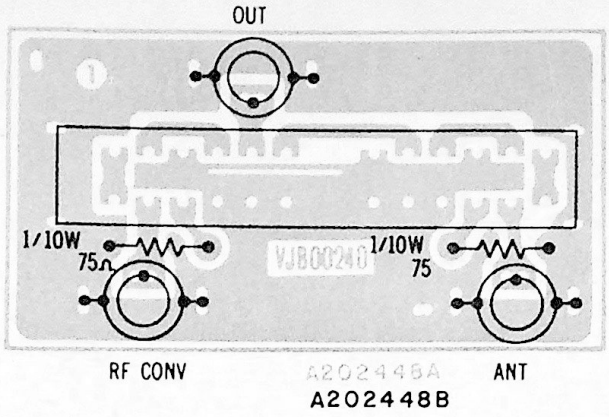

Antenna Selector Circuit Board

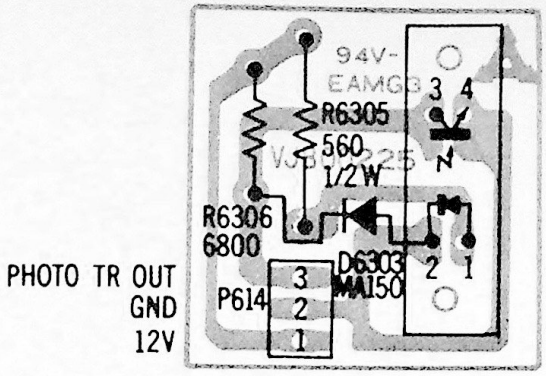

Reel Sensor Circuit Board

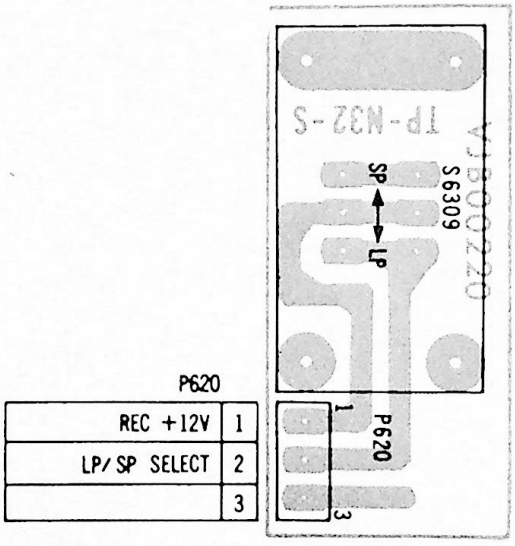

SP/LP Selector Switch Circuit Board

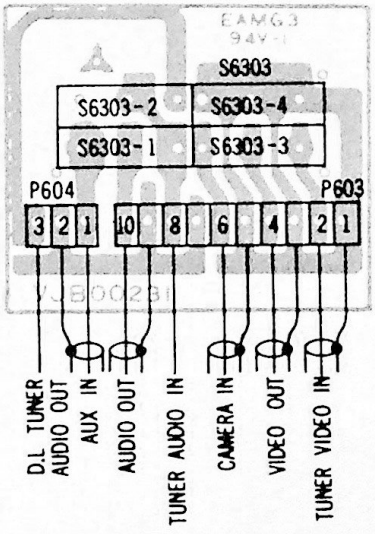

TV-Camera Input Selector Circuit Board

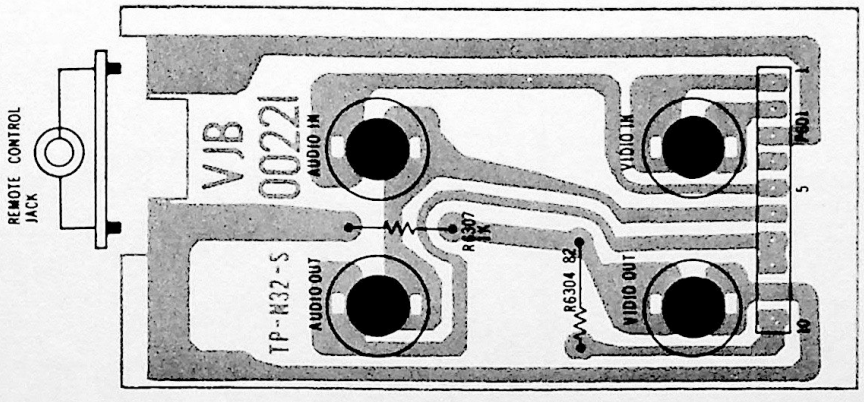

P601

1	VIDEO IN
2	GND
3	REMOTE CONTROL
4	
5	AUDIO IN
6	GND
7	AUDIO OUT
8	AUDIO OUT
9	GND
10	VIDEO OUT

Rear Jack Connection Circuit Board

SMALL CIRCUIT BOARDS
(continued)

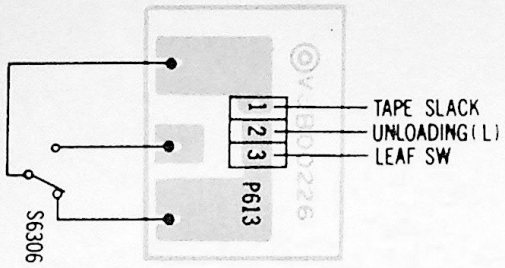

Microswitch Connection Circuit Board

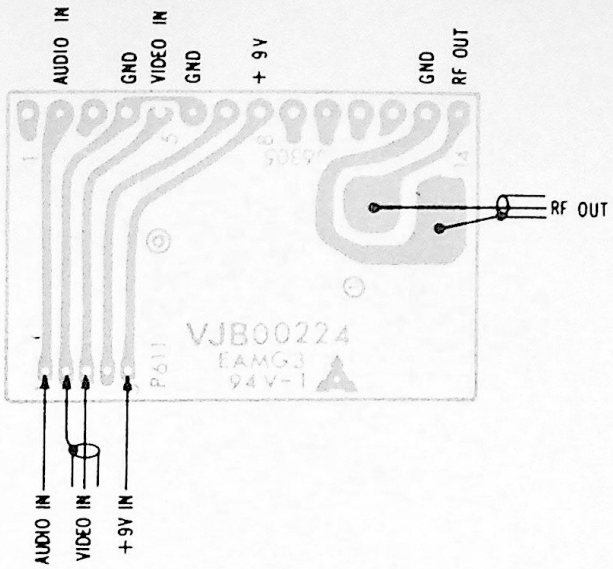

RF Converter Connection Circuit Board

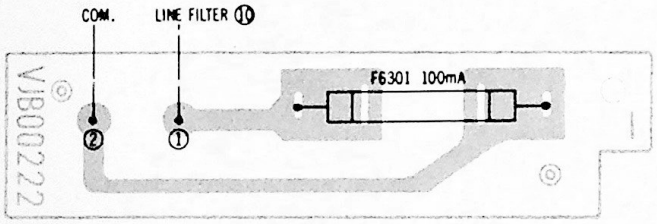

Fuse Circuit Board

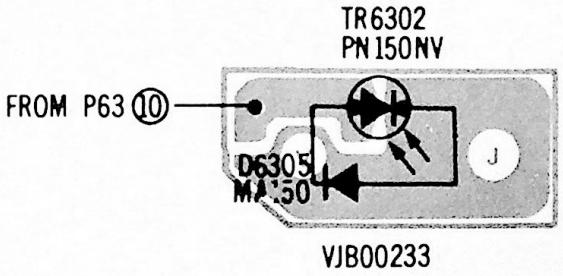

Supply Photo TR Connection Circuit Board

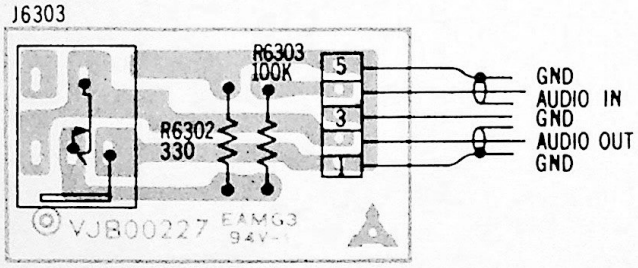

MicJack Connection Circuit Board

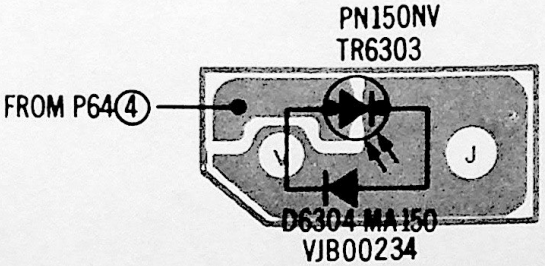

Takeup Photo TR Connection Circuit Board

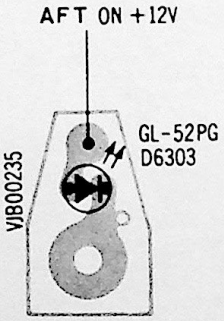

AFT Lamp Circuit Board

RF CONVERTER SCHEMATIC DIAGRAM

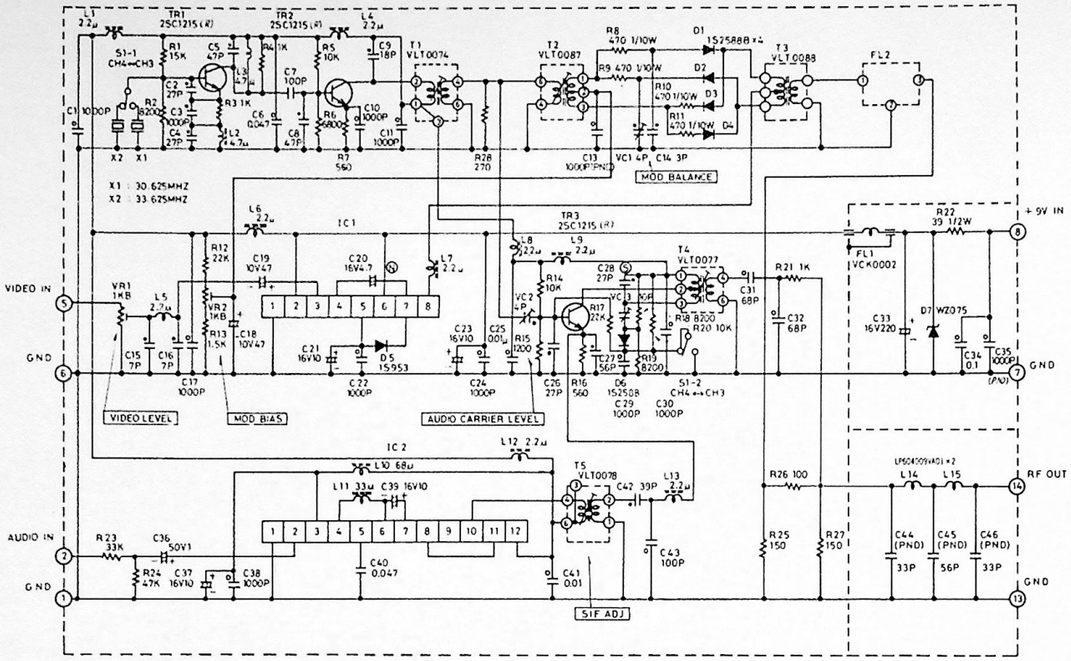

RF CONVERTER CIRCUIT BOARD

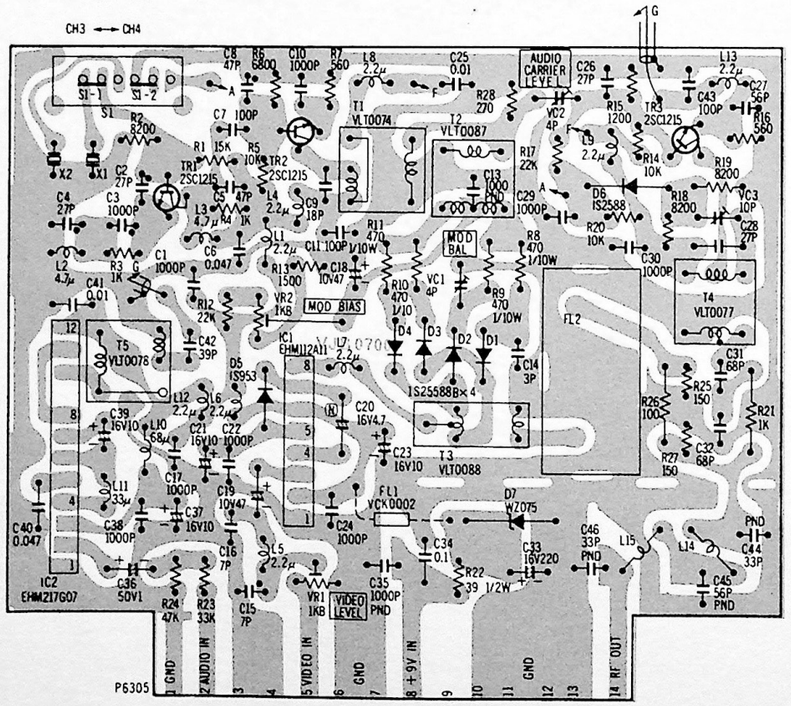

DIGITAL TIMER SCHEMATIC DIAGRAM

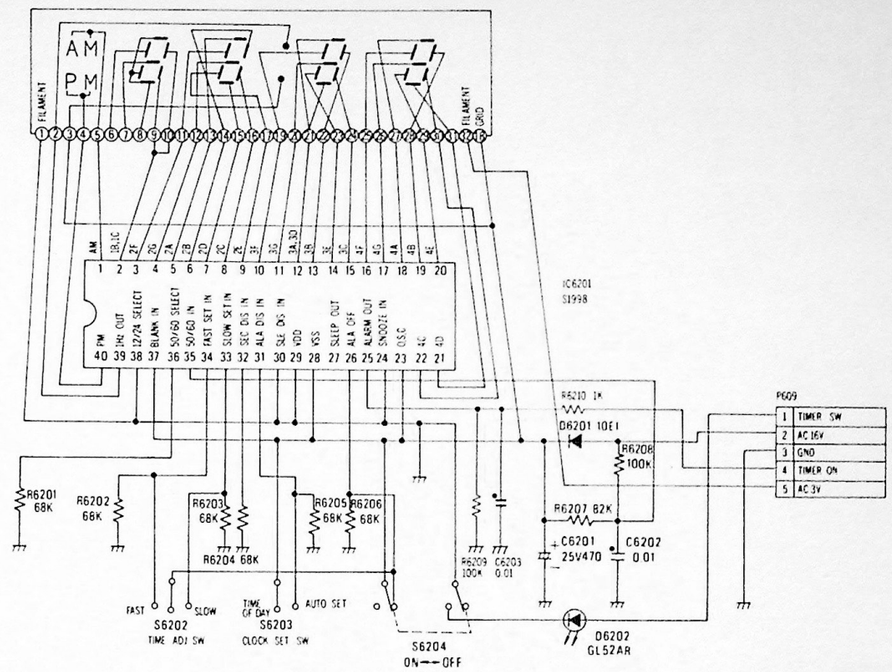

DIGITAL TIMER CIRCUIT BOARD

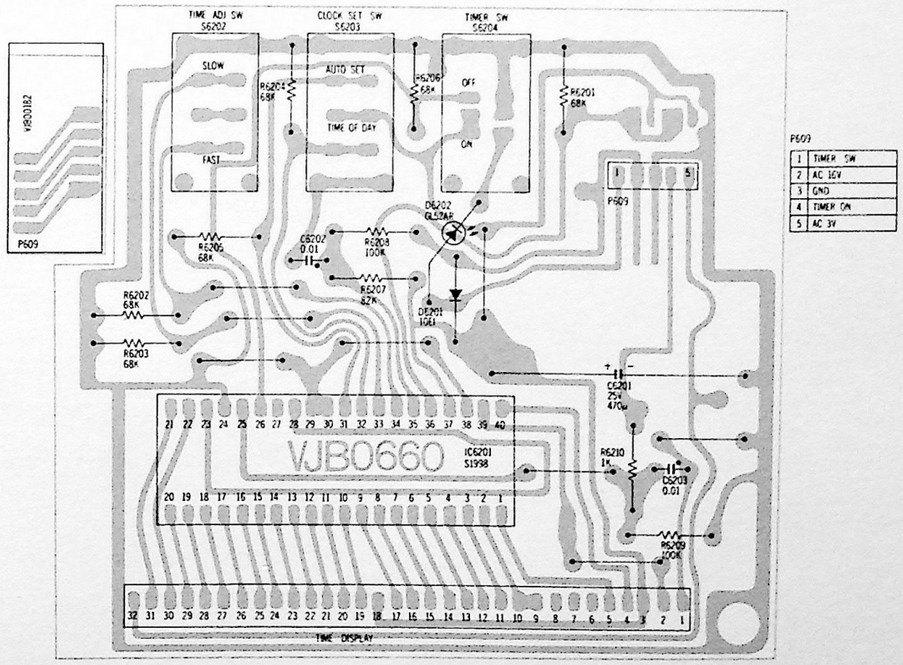

D.D. CYLINDER MOTOR DRIVE SCHEMATIC DIAGRAM

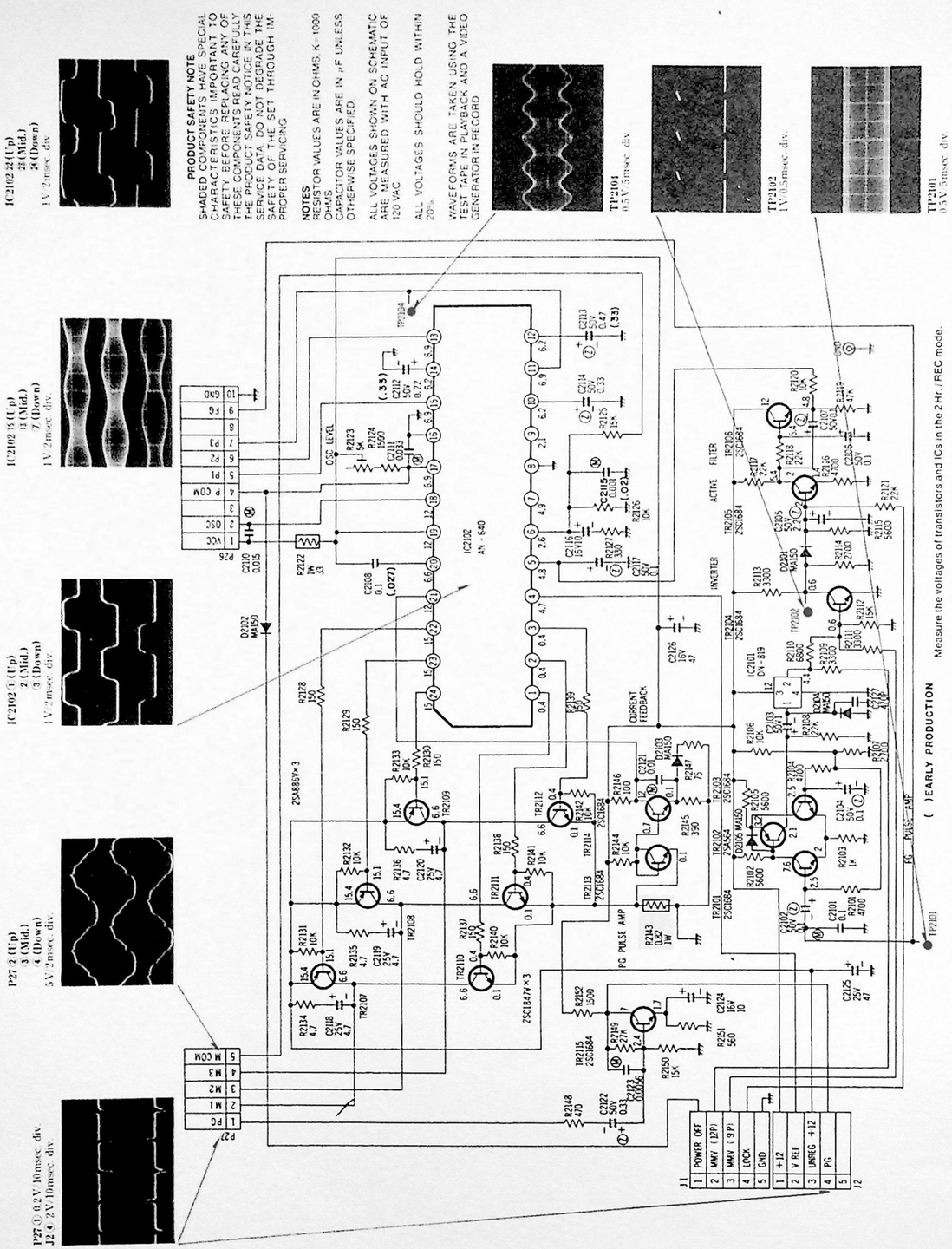

D.D. CYLINDER MOTOR DRIVE CIRCUIT BOARD

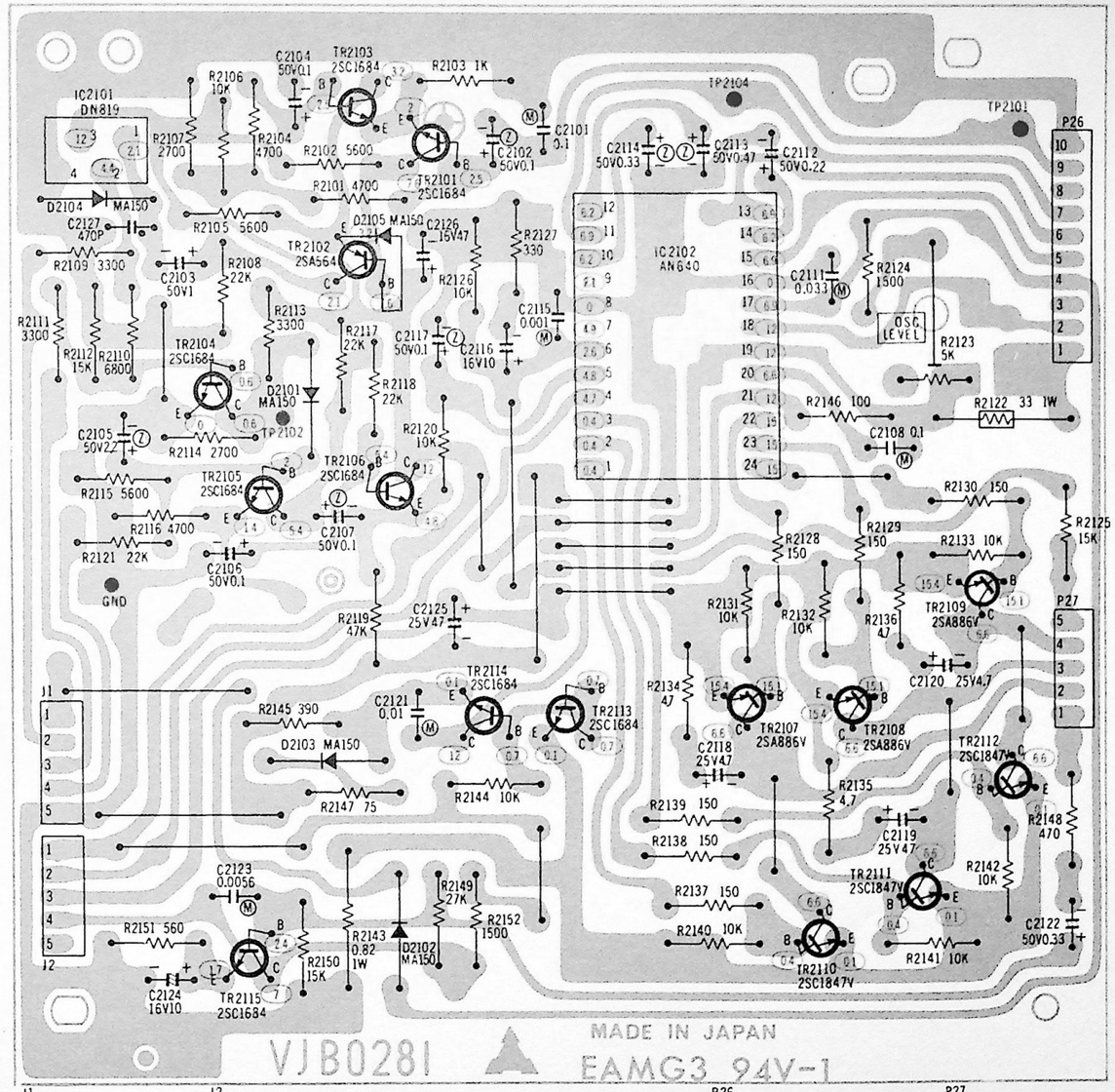

POWER SUPPLY CIRCUIT BOARD

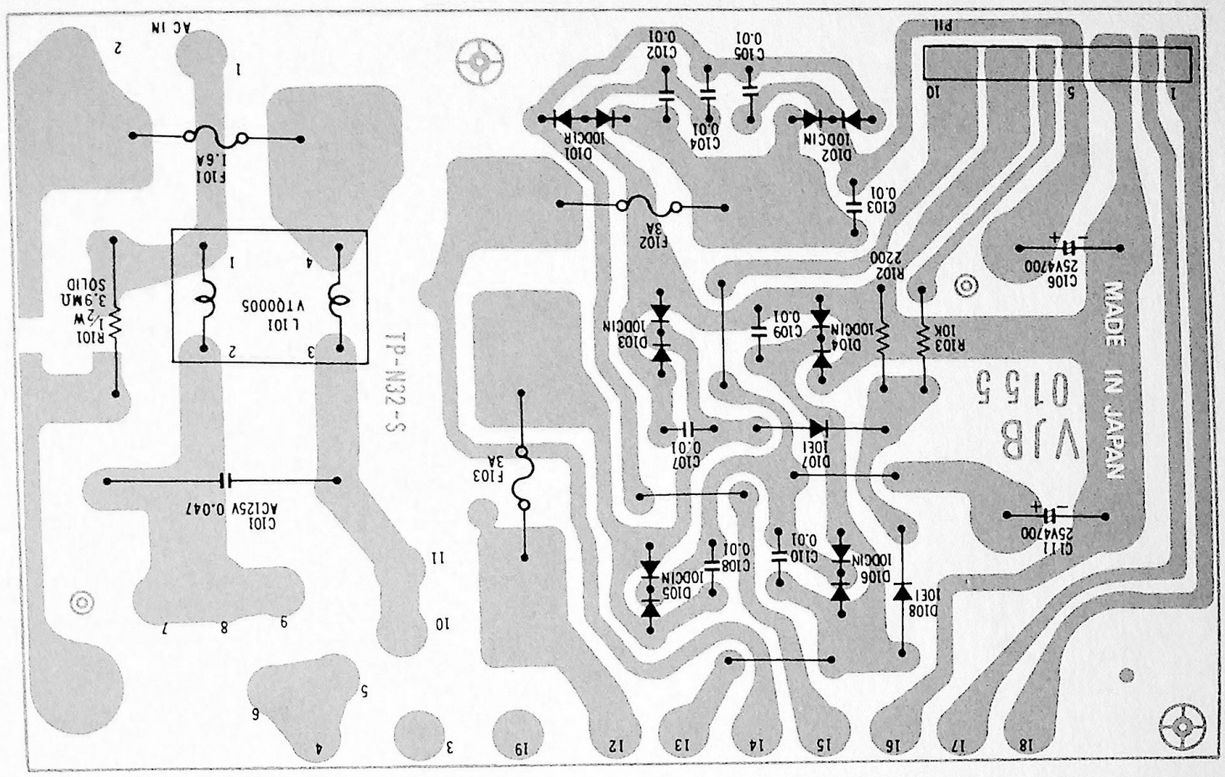

1	120VAC
2	120VAC
3	100VAC
4	
5	POWER SWITCH
6	POWER TRANS 0VAC
7	POWER TRANS 120VAC
8	TIMER TRANS 120VAC
9	
10	FUSE P.W.B
11	POWER SWITCH
12	POWER TRANS SECONDARY 16VAC
13	POWER TRANS SECONDARY 16VAC
14	POWER TRANS SECONDARY 12.5VAC
15	POWER TRANS SECONDARY 12.5VAC
16	TIMER TRANS SECONDARY 0VAC
17	TIMER TRANS SECONDARY 16VAC
18	TIMER TRANS SECONDARY 3VAC
19	TIMER TRANS PRIMARY 0VAC,FUSE P.W.B

1	TIMER TRANS 3VAC
2	TIMER TRANS 16VAC
3	TIMER TRANS GND
4	G N D
5	UNREG +12V
6	POWER STOPPAGE
7	G N D
8	G N D
9	UNREG +18V
10	UNREG +18V

VCR-1

POWER SUPPLY SCHEMATIC DIAGRAM

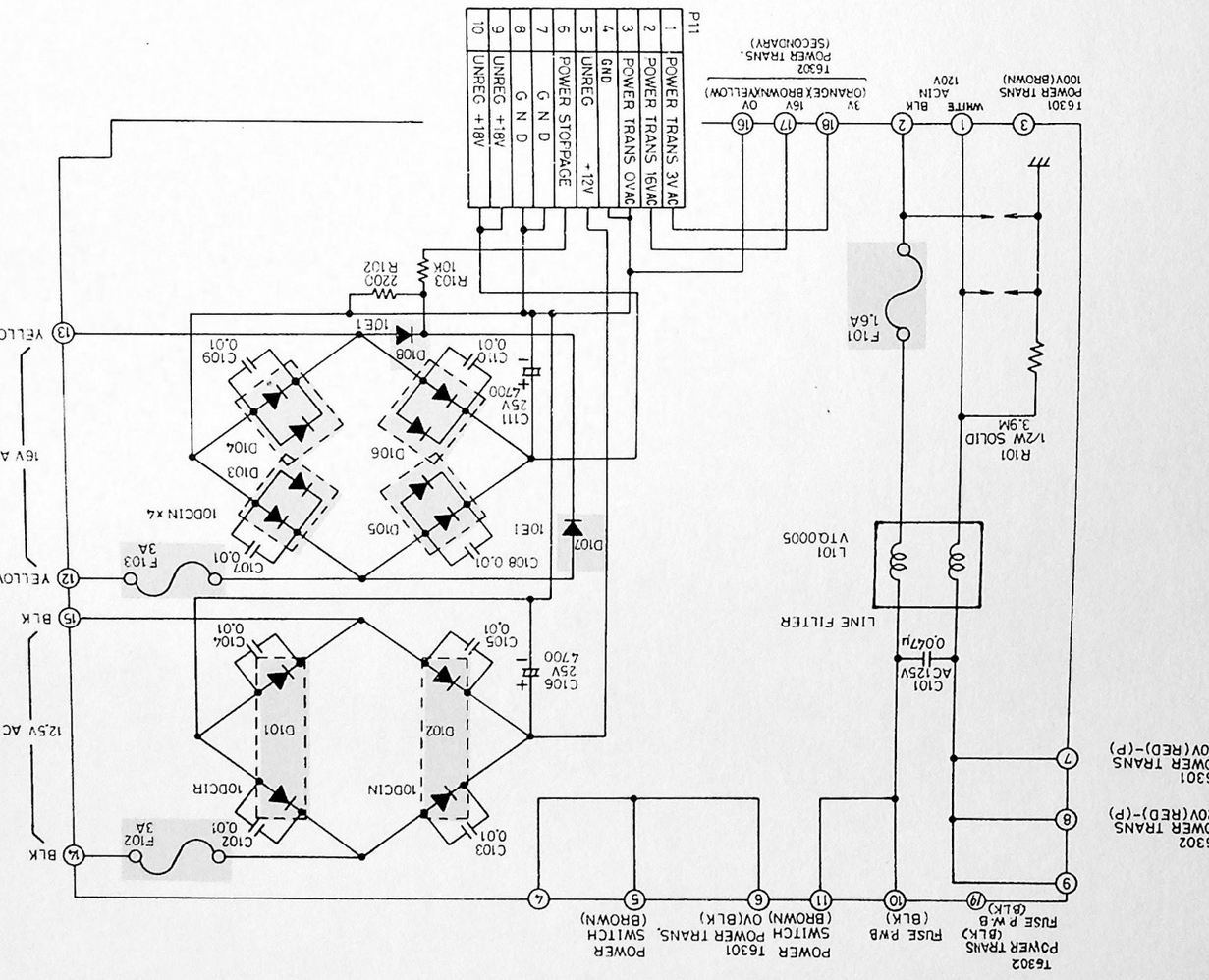

LUMINANCE SUB PROCESS SCHEMATIC DIAGRAM

(Serial No. 8033FM001 and Later — See Page 5-61 For Early Version)

(Power Supply Inside)

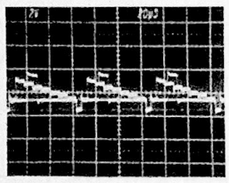

TP 3201 P.B. (2HR.REC)
2V/20μS

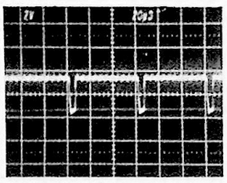

TP 3201 P.B. (4HR.REC)
2V/20μS

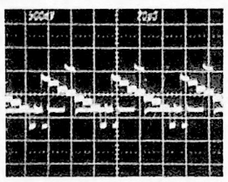

TP 3203 P.B. (2HR.REC)
.5V/20μS

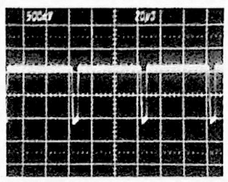

TP3203 P.B. (4HR.REC)
.5V/20μS

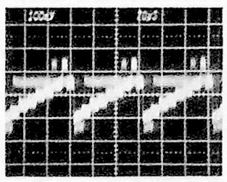

TP 3204 P.B. (2HR.REC)
.1V/20μS

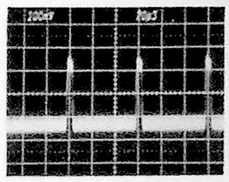

TP 3204 P.B. (4HR.REC)
.1V/20μS

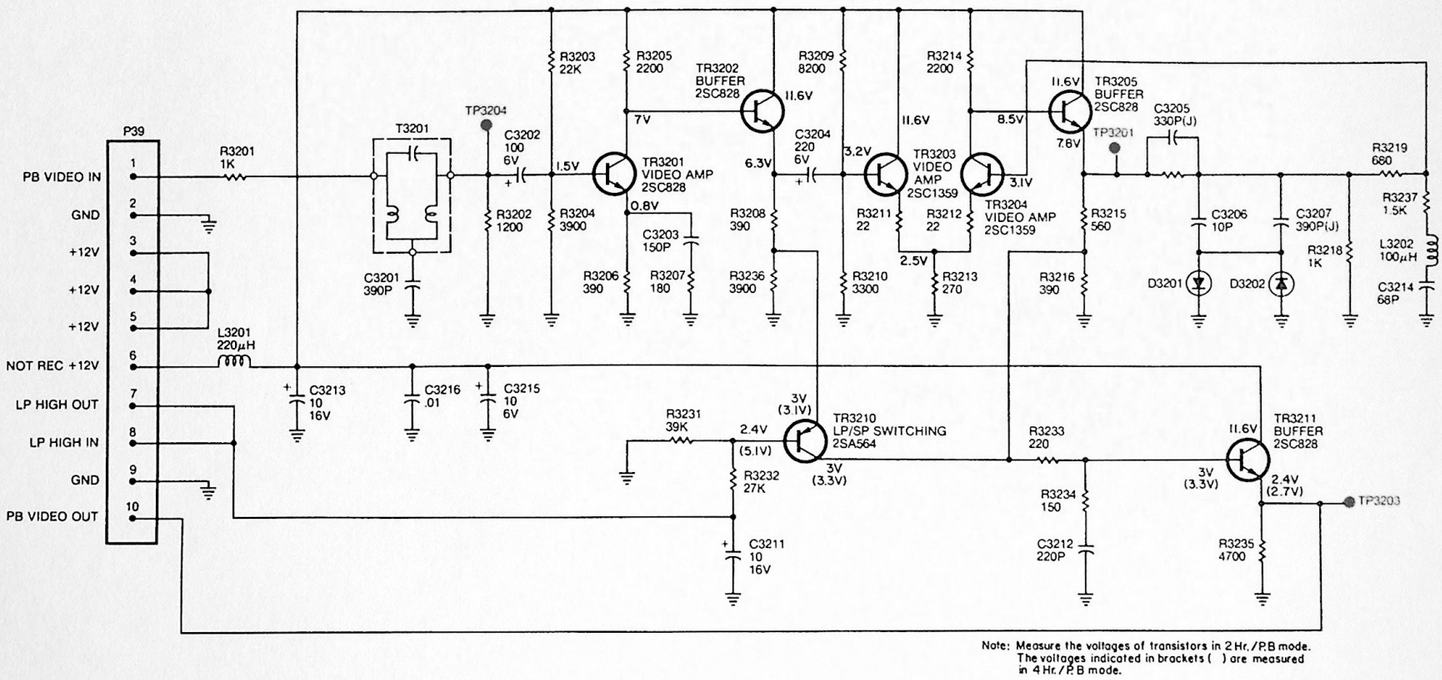

Note: Measure the voltages of transistors in 2 Hr./P.B mode.
The voltages indicated in brackets ( ) are measured in 4 Hr./P.B mode.

LUMINANCE SUB PROCESS CIRCUIT BOARD

(Serial No. 8033FM001 and Later — See Page 5-62 For Early Version)

P39	
1	P.B VIDEO IN
2	GND
3	+ 12V
4	+ 12V
5	+ 12V
6	NOT REC + 12V
7	LP HIGH OUT
8	LP HIGH IN
9	GND
10	P.B VIDEO OUT

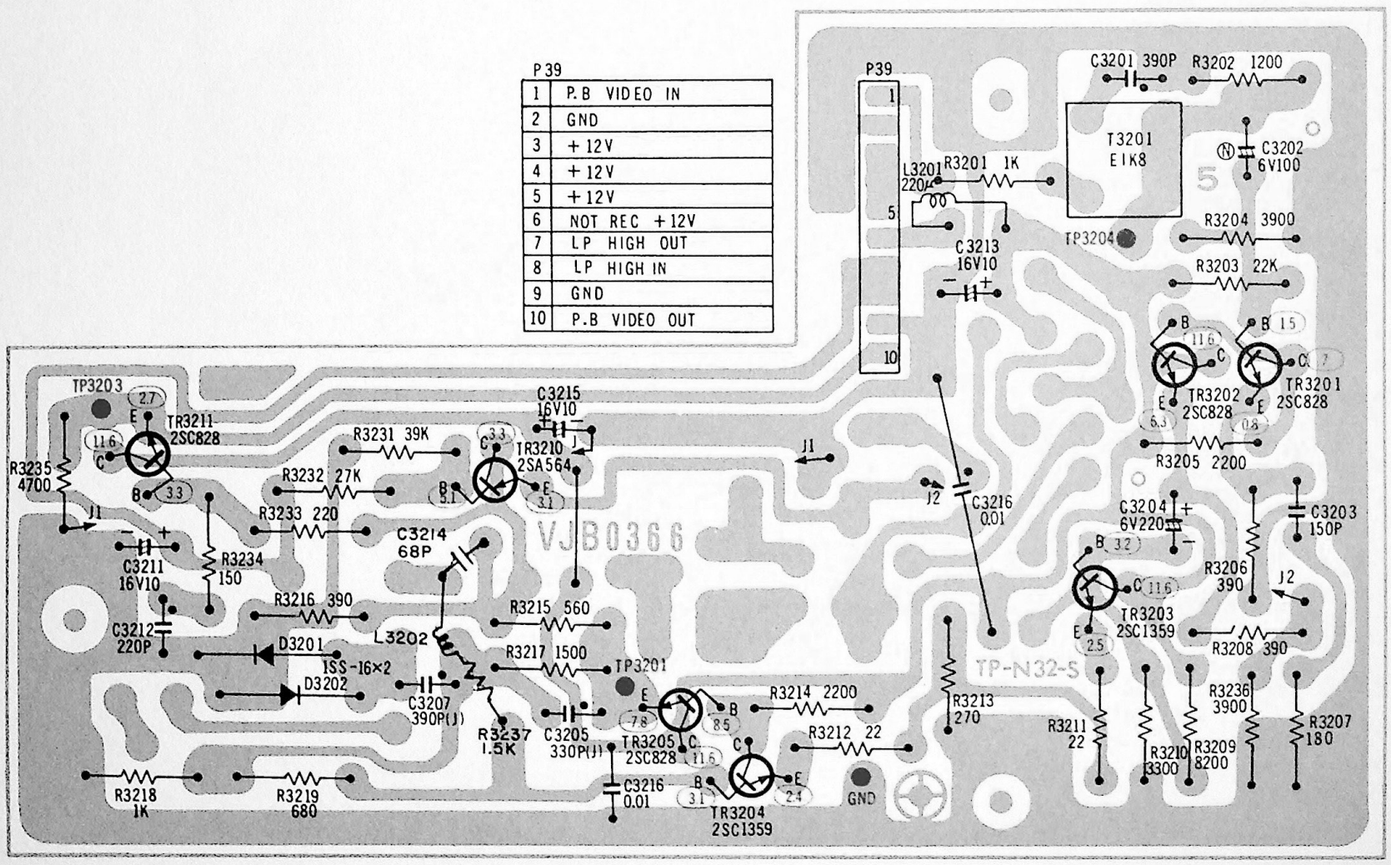

AUDIO SCHEMATIC DIAGRAM

(Serial No. 8033FM001 and Later — See Page 5-58 For Early Version)

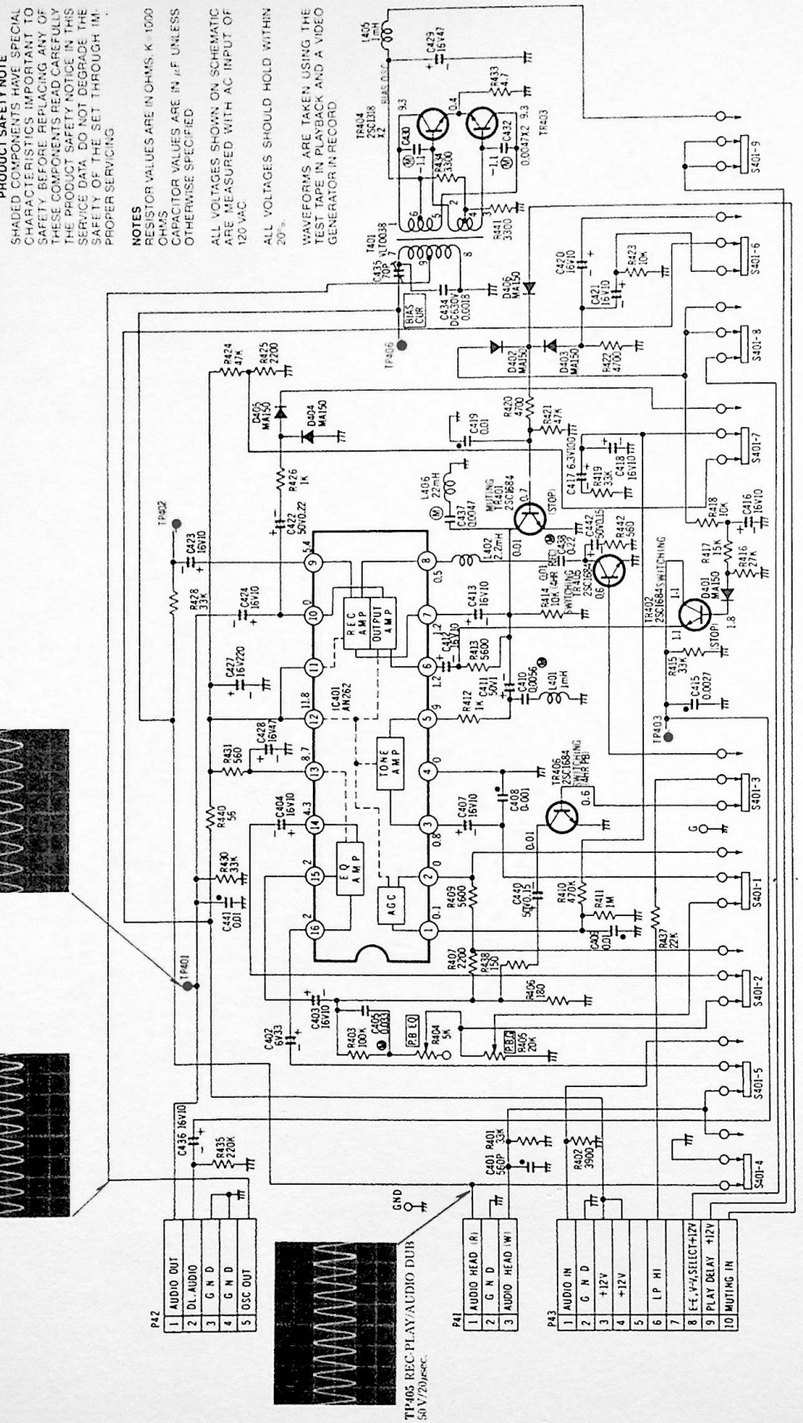

AUDIO CIRCUIT BOARD

(Serial No. 8033FM001 and Later — See Page 5-59 For Early Version)

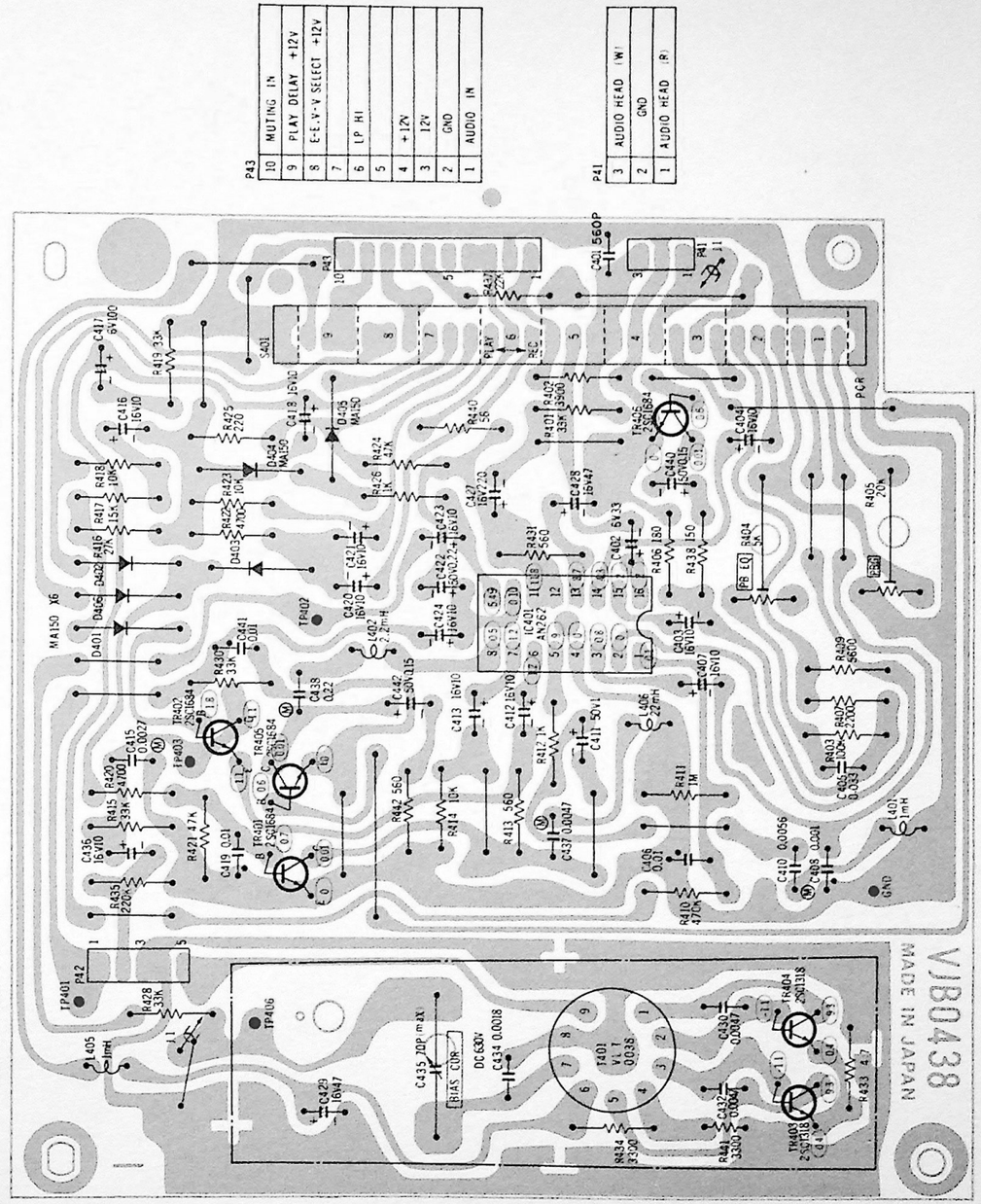

REGULATOR AND TRANSPORT CIRCUIT BOARD

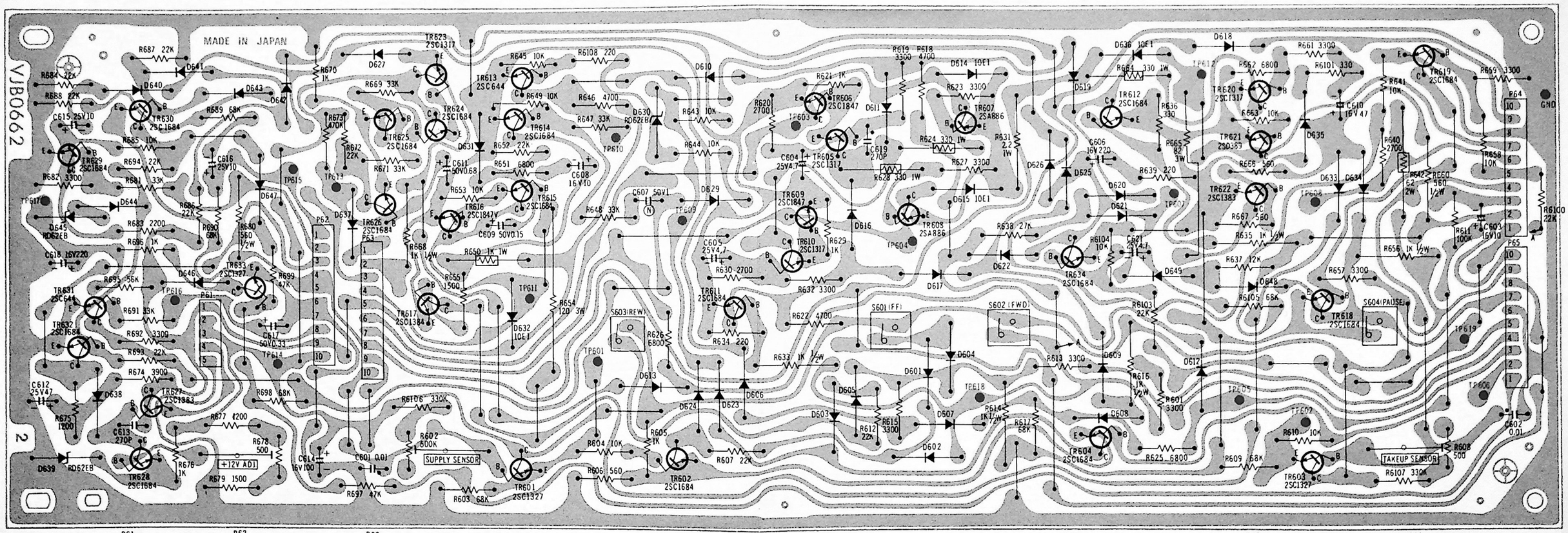

P61

1	POWER TR C
2	+12V
3	POWER TR E
4	POWER TR B
5	GND

P62

1	TIMER ON
2	TIMER SW ON
3	POWER OFF
4	UNREG +12V
5	UNREG +12V
6	GND
7	GND
8	POWER ON
9	UNREG +18V
10	+12V

P63

1	DEW SENSOR
2	DEW LAMP
3	
4	STOP SOL
5	UNREG +18V
6	LOADING MOTOR ⊕
7	LOADING MOTOR ⊖
8	UNREG +12V
9	+12V
10	SUPPLY PHOTO TR

NOTE: UNLESS OTHERWISE SPECIFIED
ALL DIODES ARE MA150

P65

10	LOADING END +12V
9	+12V
8	UNREG +12V
7	PAUSE Ⓛ
6	GND
5	FWD
4	FF, REW +12V
3	CAPSTAN M ON
2	TRACKING SHIFTER
1	CYL LOCK

P64

10	UNLOADING END Ⓛ
9	TAPE SLACK SW
8	GND
7	PRESSURE
6	LAMP OUT TR
5	PAUSE(REMOTE)
4	TAKE UP PHOTO TR
3	MEMORY COUNTER
2	LOADING END +12V
1	REEL STOP PHOTO TR

VCR-1

REGULATOR AND TRANSPORT SCHEMATIC DIAGRAM

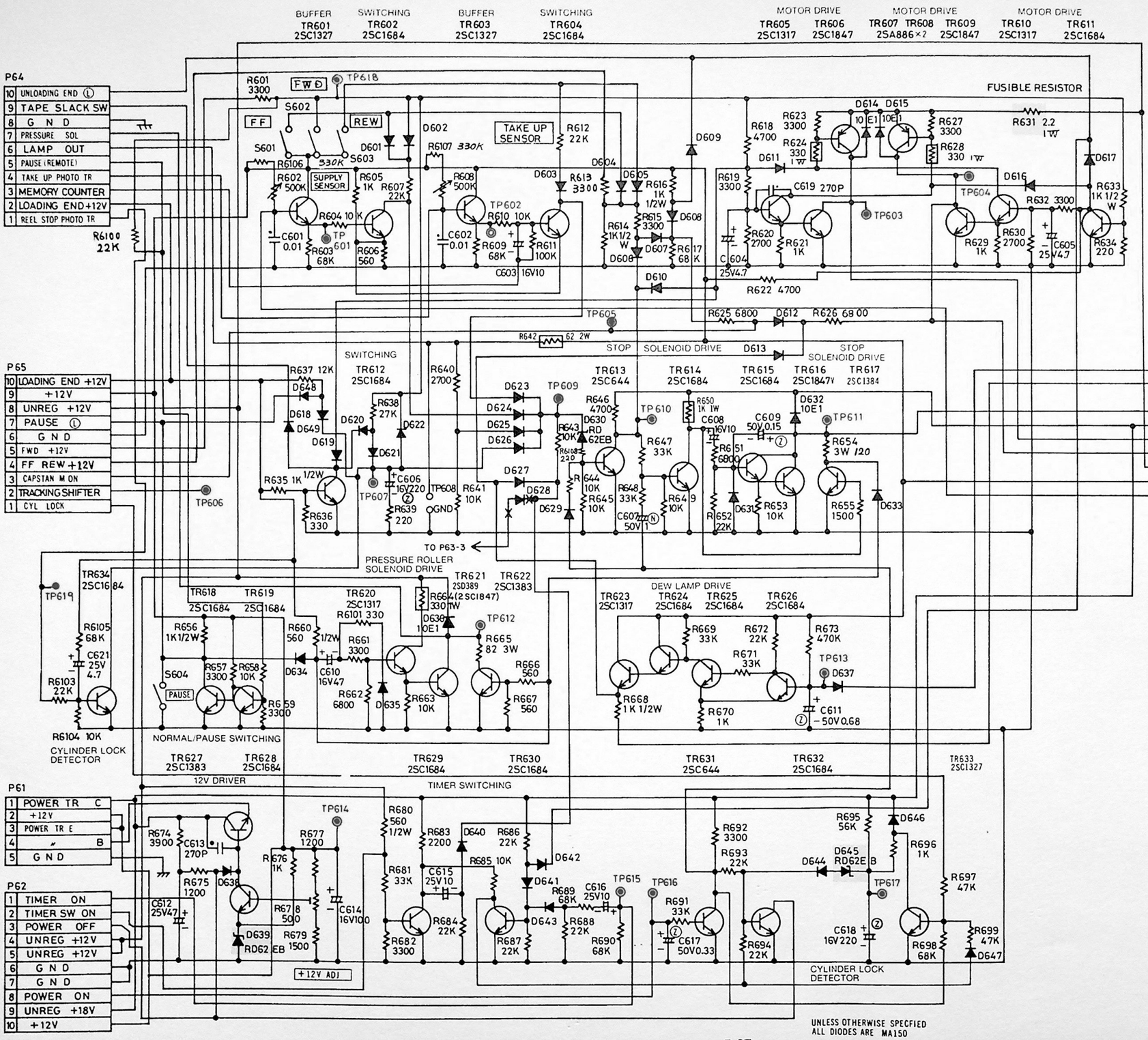

PRODUCT SAFETY NOTE
SHADED COMPONENTS HAVE SPECIAL CHARACTERISTICS IMPORTANT TO SAFETY. BEFORE REPLACING ANY OF THESE COMPONENTS READ CAREFULLY THE PRODUCT SAFETY NOTICE IN THIS SERVICE DATA. DO NOT DEGRADE THE SAFETY OF THE SET THROUGH IMPROPER SERVICING.

NOTES
RESISTOR VALUES ARE IN OHMS. K=1000 OHMS
CAPACITOR VALUES ARE IN μF UNLESS OTHERWISE SPECIFIED.

ALL VOLTAGES SHOWN ON SCHEMATIC ARE MEASURED WITH AC INPUT OF 120 VAC.

ALL VOLTAGES SHOULD HOLD WITHIN 20%.

WAVEFORMS ARE TAKEN USING THE TEST TAPE IN PLAYBACK AND A VIDEO GENERATOR IN RECORD.

TRANSISTOR REF NO. / MODE	TR601			TR602			TR603			TR604			TR605			TR606			TR607		
	E	B	C	E	B	C	E	B	C	E	B	C	E	B	C	E	B	C	E	B	C
STOP	10.9	11.1	12.0	4.5	5.2	4.5	10.6	10.9	12.0	4.5	5.4	4.7	0	0	15.2	0	0	0.3	15.2	15.2	0.3
PLAY	10.9	11.1	12.0	4.5	5.2	4.5	10.6	10.9	12.0	4.5	5.4	4.7	0	0.3	14.2	0	0	5.3	14.2	14.2	5.3
FF	10.9	11.1	12.0	4.5	5.2	4.5	10.6	10.9	12.0	4.5	5.4	4.7	0	0	14.8	0	0	5.7	14.9	14.9	5.7
REW	10.9	11.1	12.0	4.5	5.2	4.5	10.6	10.9	12.0	4.5	5.4	4.7	0	0	14.4	0	0	7.0	14.6	14.5	7.0

TRANSISTOR REF NO. / MODE	TR608			TR609			TR610			TR611			TR612			TR613			TR614		
	E	B	C	E	B	C	E	B	C	E	B	C	E	B	C	E	B	C	E	B	C
STOP	15.2	15.2	0.3	0	0	0.3	0	0.3	15.2	0	0	0.7	0	0	0	0	0	16.2	0	0.7	0.1
PLAY	14.2	14.2	5.5	0	0	5.3	0	0	14.2	0	0.8	0	0	0	0.8	0	0	16.2	0	0.7	0.1
FF	14.9	14.9	5.7	0	0	5.7	0	0.3	14.9	0	0	0.7	0	0	0	0	0	16.2	0	0.7	0.1
REW	14.5	14.5	7.0	0	0	7.0	0	0.3	14.7	0	0	0.7	0	0	0	0	0	16.2	0	0.7	0.1

TRANSISTOR REF NO. / MODE	TR615			TR616			TR617			TR618			TR619			TR620			TR621		
	E	B	C	E	B	C	E	B	C	E	B	C	E	B	C	E	B	C	E	B	C
STOP	0	0	18.3	0	0	18.3	0	0.1	18.3	0	0	11.6	0	0.7	0	0	0	15.0	0	0	15.0
PLAY	0	0	18.3	0	0	18.3	0	0.1	18.3	0	0	11.6	0	0.7	0	0.9~0	1.5~0	0.14.7	0	0	0.13.1
FF	0	0	18.3	0	0	18.3	0	0.1	18.3	0	0	11.6	0	0.7	0	0	0	15.0	0	0	15.0
REW	0	0	18.3	0	0	18.3	0	0.1	18.3	0	0	11.6	0	0.7	0	0	0	15.0	0	0	15.0

TRANSISTOR REF NO. / MODE	TR622			TR623			TR624			TR625			TR626			TR627			TR628		
	E	B	C	E	B	C	E	B	C	E	B	C	E	B	C	E	B	C	E	B	C
STOP	0	0	15.2	0.1	0.2	12.0	0.2	0.6	12.0	0.6	1.2	0.6	0.6	0.5	7.7	12.7	13.4	18.6	6.1	6.7	13.4
PLAY	0	0.8	0.1	0.1	0.2	12.0	0.2	0.6	12.0	0.6	1.2	0.6	0.6	0.5	7.7	12.7	13.4	18.6	6.1	6.7	13.4
FF	0	0	15.2	0.1	0.2	12.0	0.2	0.6	12.0	0.6	1.2	0.6	0.6	0.5	7.7	12.7	13.4	18.6	6.1	6.7	13.4
REW	0	0	15.2	0.1	0.2	12.0	0.2	0.6	12.0	0.6	1.2	0.6	0.6	0.5	7.7	12.7	13.4	18.6	6.1	6.7	13.4

TRANSISTOR REF NO. / MODE	TR629			TR630			TR631			TR632			TR633			TR634					
	E	B	C	E	B	C	E	B	C	E	B	C	E	B	C	E	B	C			
STOP	0	0.7	0.1	0	0.2	0.1	0	0.7	0	0	0.1	14.0	0	0.6	0	0	0	0			
PLAY	0	0.7	0.1	0	0.7	0	0	0.7	0	0	0	14.0	0	0.6	0	0	0.6	0			
FF	0	0.7	0.1	0	0.2	0.1	0	0.7	0	0	0.1	14.0	0	0.6	0	0	0.6	0			
REW	0	0.7	0.1	0	0.2	0.1	0	0.7	0	0	0.1	14.0	0	0.6	0	0	0.6	0			

SERVO CIRCUIT BOARD

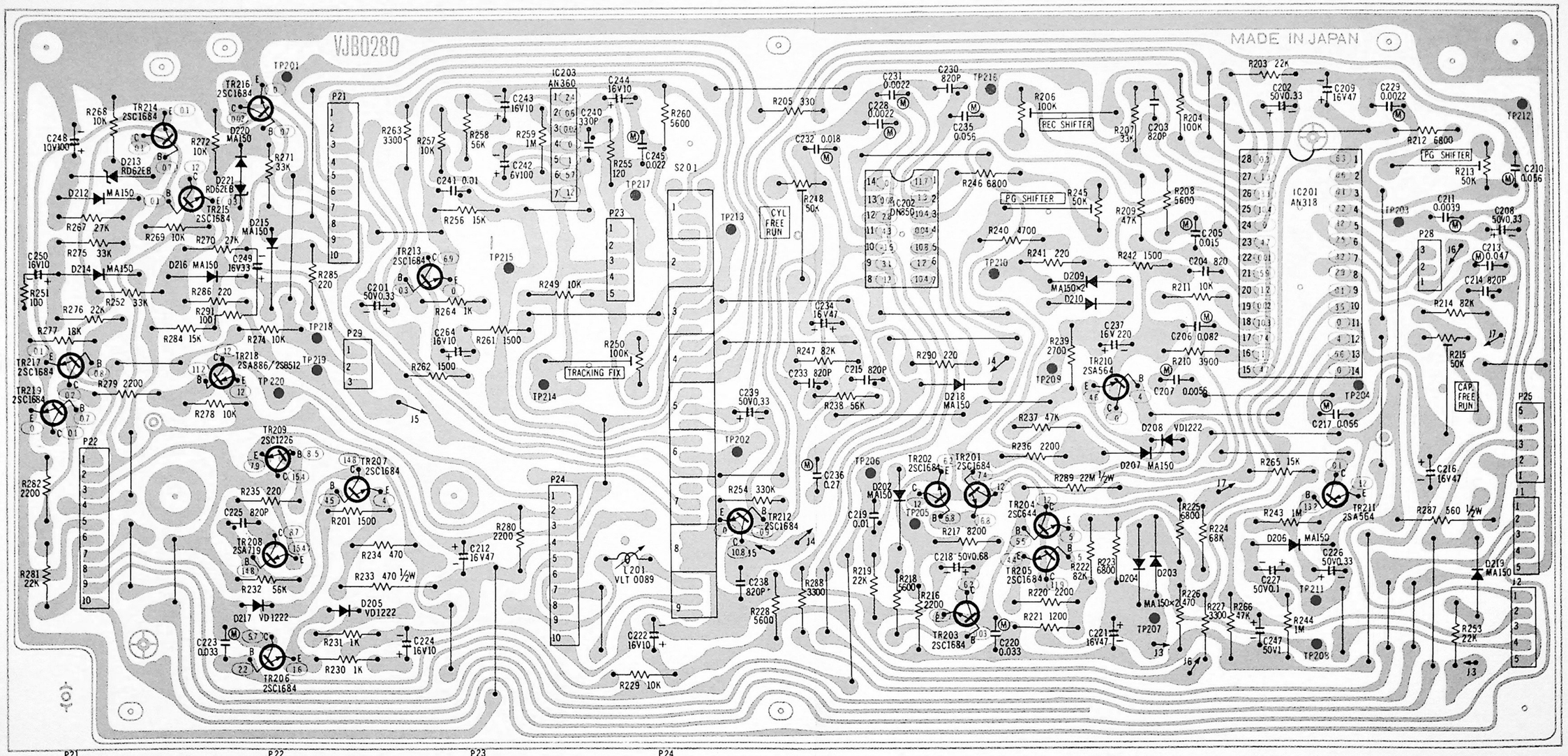

P21	
1	EXCEPT REC +12V
2	EXCEPT REC +12V
3	V SYNC
4	REF OSC
5	P G(30Hz) OUT
6	PAUSE MUTING
7	GND
8	DELAYED REC +12V
9	REC +12V
10	E-E V-V SEL

P22	
1	LOADING END
2	+12V
3	UNREG +12V
4	PAUSE Ⓛ
5	GND
6	FWD +12V
7	
8	CAPSTAN M.ON
9	TRACKING SHIFTER
10	CYL LOCK

P23	
1	GND
2	CTL HEAD
3	+12V
4	TRACKING
5	TRACKING

P24	
1	E-E V-V SEL
2	DELATED FWD +12V
3	+12V
4	GND
5	OSC IN
6	GND
7	A.E HEAD
8	GND
9	F.E HEAD
10	F.E HEAD

P28	
3	F.G OUT
2	F.G IN
1	LP C FREE RUN

P29	
1	LP/SP MUTING
2	MUTING
3	P.B CTL OUT

P25	
5	CAPSTAN P G
4	CAPSTAN F G
3	CAPSTAN MOTOR
2	POWER ON
1	POWER OFF

J1	
1	POWER OFF
2	MMV IN (12P)
3	MMV OUT(9P)
4	LOCK
5	GND

J2	
1	+12V
2	V REF
3	UNREG +12V
4	P G
5	UNREG 12V

VCR-1

SERVO CIRCUIT SCHEMATIC DIAGRAM

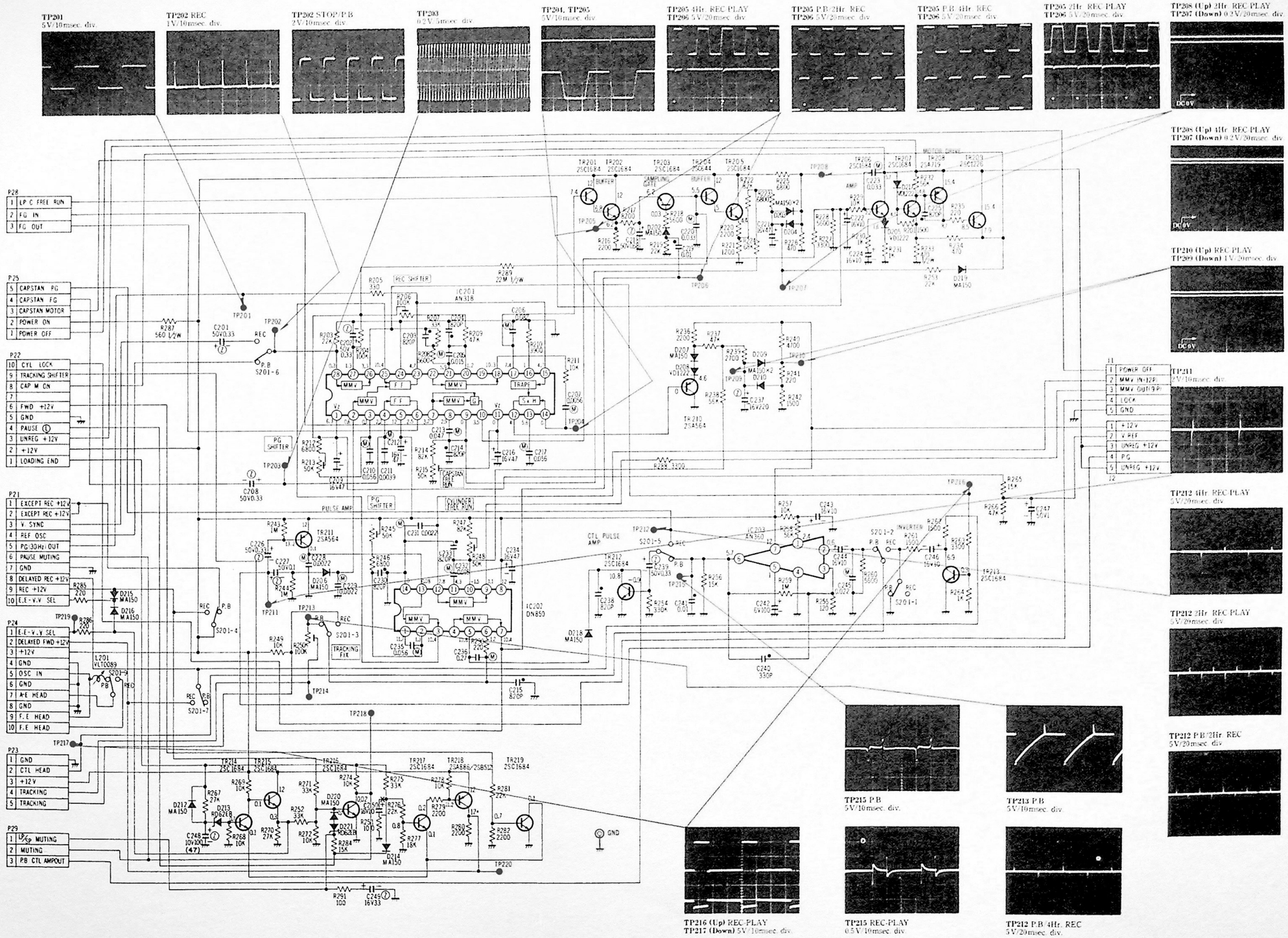

PRODUCT SAFETY NOTE

SHADED COMPONENTS HAVE SPECIAL CHARACTERISTICS IMPORTANT TO SAFETY. BEFORE REPLACING ANY OF THESE COMPONENTS READ CAREFULLY THE PRODUCT SAFETY NOTICE IN THIS SERVICE DATA. DO NOT DEGRADE THE SAFETY OF THE SET THROUGH IMPROPER SERVICING.

NOTES

RESISTOR VALUES ARE IN OHMS. K=1000 OHMS.
CAPACITOR VALUES ARE IN μF UNLESS OTHERWISE SPECIFIED.

ALL VOLTAGES SHOWN ON SCHEMATIC ARE MEASURED WITH AC INPUT OF 120 VAC.

ALL VOLTAGES SHOULD HOLD WITHIN 20%.

WAVEFORMS ARE TAKEN USING THE TEST TAPE IN PLAYBACK AND A VIDEO GENERATOR IN RECORD.

FM MODULATOR RECORD AND HEAD AMP CIRCUIT BOARD

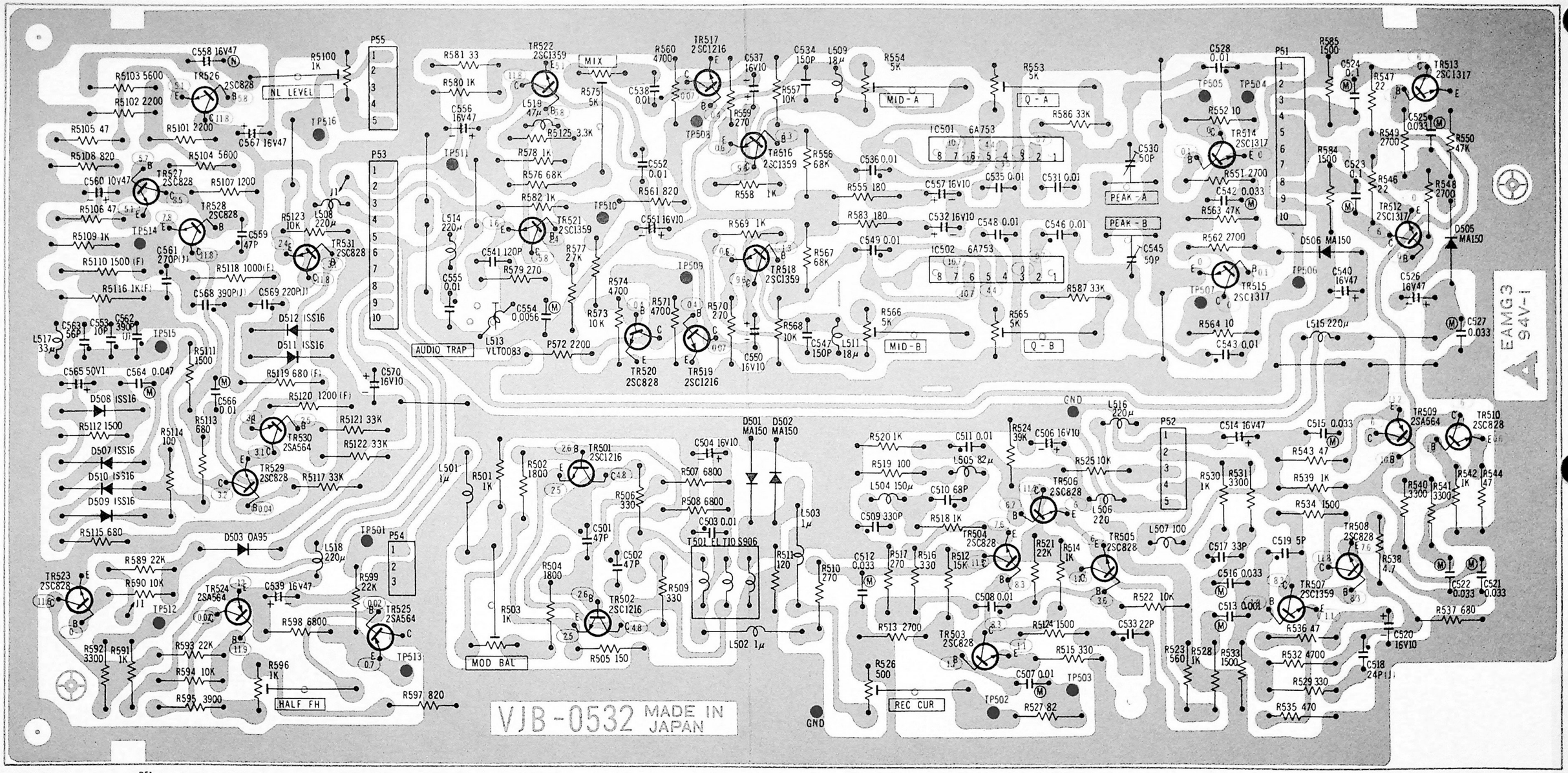

P51

1	VIDEO HEAD	A (X)
2		
3	VIDEO HEAD	A (X)
4		
5	GND	
6	GND	
7		
8	VIDEO HEAD	B (Y)
9		
10	VIDEO HEAD	B (X)

P52

1	GND	
2	REC CHROMA IN	(629 KHz)
3	ACK IN	
4	REC DELAY	+12V IN
5	REC	+12V IN

P53

1	GND	
2	RF OUT	
3	PG 30Hz IN	
4	REC +12V IN	
5	EXCEPT REC	+12V IN
6	GND	
7		
8	LP HIGH	
9	+12V IN	
10	30Hz PULSE OUT	

P54

1	EMPHASIS VIDEO IN	
2		
3	GND	

P55

1	VIDEO OUT (N.L.E)	
2	GND	
3		
4	GND	
5	VIDEO IN	(N.L.E)

VCR-1

FM MODULATOR RECORD AND HEAD AMP SCHEMATIC DIAGRAM

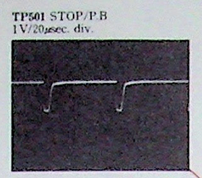

TP501 STOP/P.B
1V/20μsec. div.



TP501 REC
1V/20μsec. div.

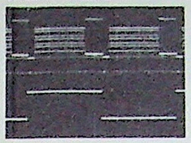

TP501 4Hr. REC
0.5V/5msec. div.
TP513 2V/5msec. div.

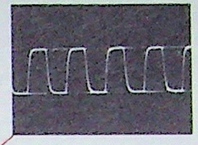

TP502 REC (No Input)
0.2V/0.2μsec. div.

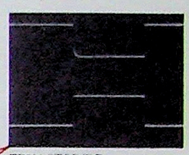

TP508 STOP/P.B
TP509 0.5V/5msec. div.

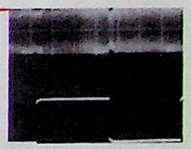

TP511 P.B
0.2V/5msec. div.
TP510 2V/5msec. div.

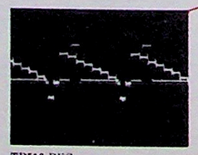

TP516 REC
0.5V/20μsec. div.

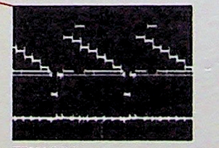

TP514 REC
TP515 1V/20μsec. div.

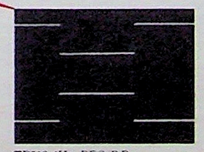

TP512 4Hr. REC/P.B
TP513 2V/5msec. div.

PRODUCT SAFETY NOTE
SHADED COMPONENTS HAVE SPECIAL CHARACTERISTICS IMPORTANT TO SAFETY. BEFORE REPLACING ANY OF THESE COMPONENTS READ CAREFULLY THE PRODUCT SAFETY NOTICE IN THIS SERVICE DATA. DO NOT DEGRADE THE SAFETY OF THE SET THROUGH IMPROPER SERVICING.

NOTES
RESISTOR VALUES ARE IN OHMS, K=1000 OHMS
CAPACITOR VALUES ARE IN μF UNLESS OTHERWISE SPECIFIED.

ALL VOLTAGES SHOWN ON SCHEMATIC ARE MEASURED WITH AC INPUT OF 120 VAC.

ALL VOLTAGES SHOULD HOLD WITHIN 20%.

WAVEFORMS ARE TAKEN USING THE TEST TAPE IN PLAYBACK AND A VIDEO GENERATOR IN RECORD.

P54	
1	EMPHASIS VIDEO IN
2	
3	G N D

P52	
1	G N D
2	REC CHROMA IN(629KHZ)
3	A C K IN
4	REC DELAY +12V IN
5	R E C +12V IN

P53	
1	G N D
2	RF OUT
3	PG 30HZ IN
4	REC +12V
5	EXCEPT REC +12V
6	G N D
7	
8	LP HIGH
9	+12V IN
10	30HZ PULSE OUT

P55	
1	VIDEO OUT (N.L.)
2	G N D
3	
4	G N D
5	VIDEO IN (N.L.)

P51	
1	VIDEO HEAD A (X)
2	
3	VIDEO HEAD A (Y)
4	
5	G N D
6	G N D
7	
8	VIDEO HEAD B (Y)
9	
10	VIDEO HEAD B (X)

Note: Measure the voltages of transistors in the 2Hr. REC mode.
The voltages of TR514—522 and IC501, 502 are measured in the 2Hr./P.B. mode.

SP/LP CIRCUIT BOARD

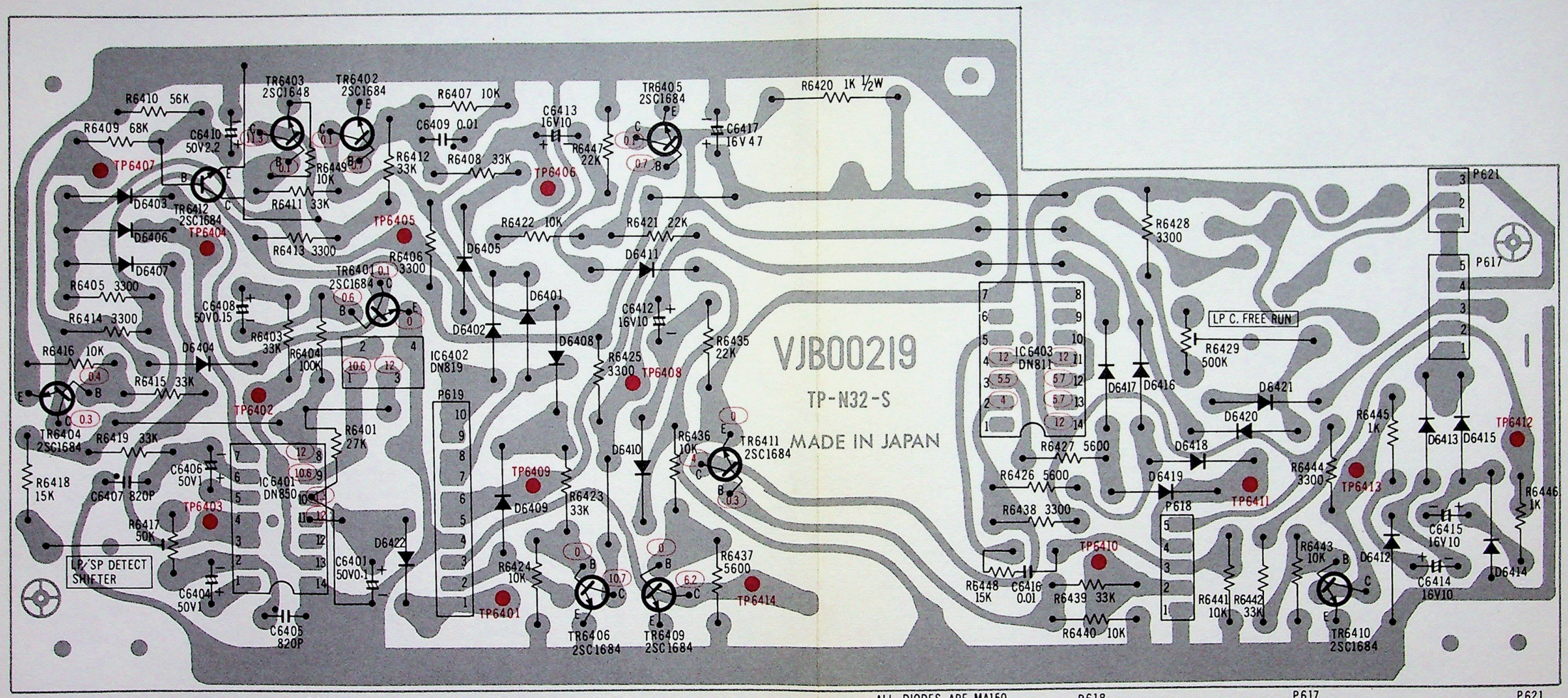

ALL DIODES ARE MA150

P619

10	REC +12V
9	REC +12V
8	F F REW +12V
7	F F REW +12V
6	AUDIO LP HIGH
5	VIDEO LP HIGH
4	
3	LP/SP MUTING
2	LP/SP SELECT SW
1	P B CTL AMP IN

P618

5	+12V
4	FG OUT
3	CAPSTAN PG
2	FG IN
1	GND

P617

5	TRACKING
4	TRACKING
3	LP C FREE RUN
2	PHOTO TR IN
1	REEL STOP PHOTO

P621

3	TRACKING
2	
1	TRACKING

VCR-1

SP/LP SCHEMATIC DIAGRAM

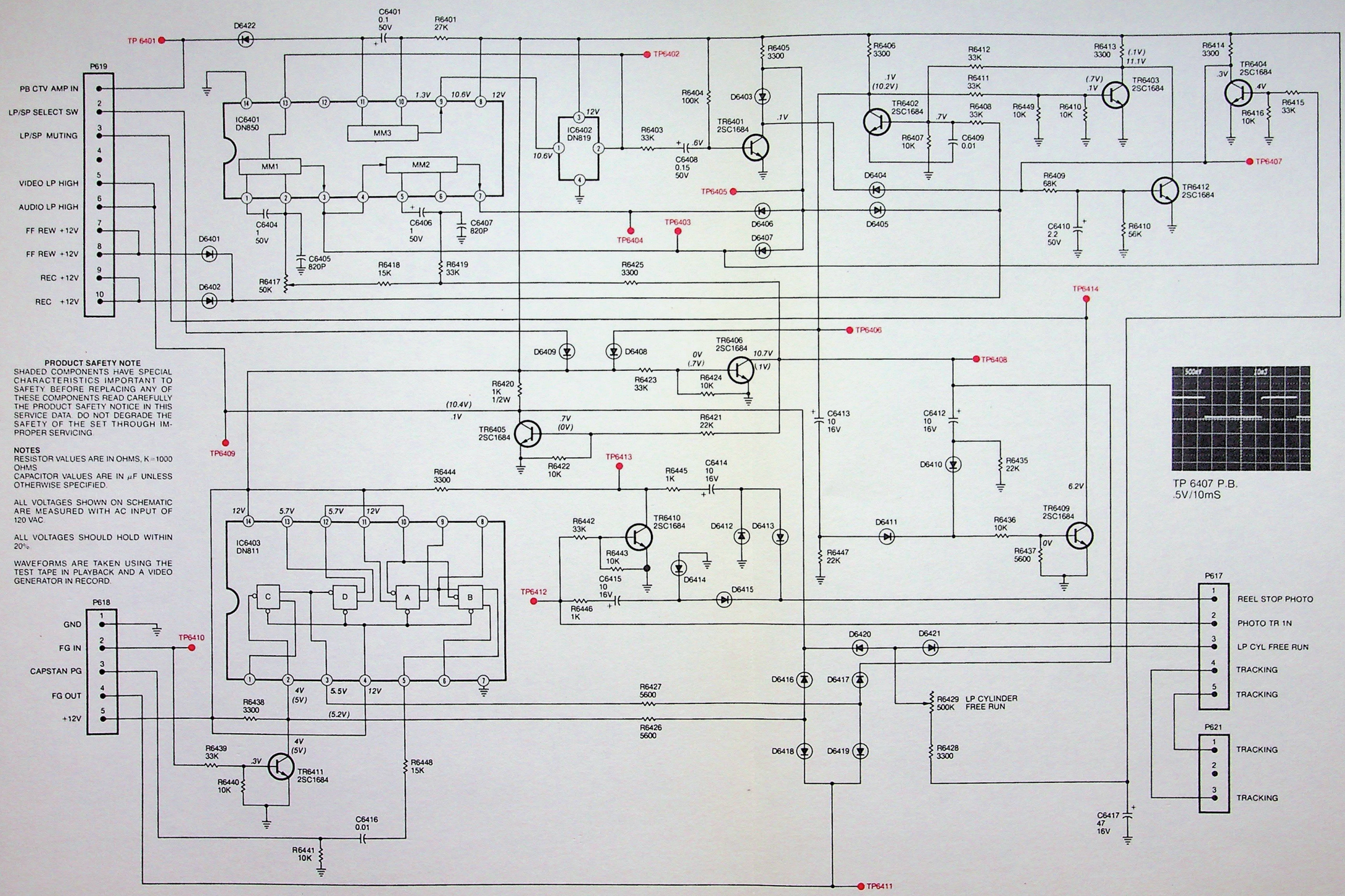

PRODUCT SAFETY NOTE
SHADED COMPONENTS HAVE SPECIAL CHARACTERISTICS IMPORTANT TO SAFETY. BEFORE REPLACING ANY OF THESE COMPONENTS READ CAREFULLY THE PRODUCT SAFETY NOTICE IN THIS SERVICE DATA. DO NOT DEGRADE THE SAFETY OF THE SET THROUGH IMPROPER SERVICING.

NOTES
RESISTOR VALUES ARE IN OHMS, K=1000 OHMS.
CAPACITOR VALUES ARE IN μF UNLESS OTHERWISE SPECIFIED.

ALL VOLTAGES SHOWN ON SCHEMATIC ARE MEASURED WITH AC INPUT OF 120 VAC.

ALL VOLTAGES SHOULD HOLD WITHIN 20%.

WAVEFORMS ARE TAKEN USING THE TEST TAPE IN PLAYBACK AND A VIDEO GENERATOR IN RECORD.

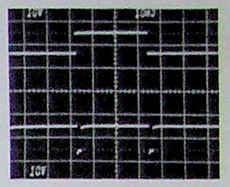

TP 6401 P.B.
TP 6402 10V/10mS

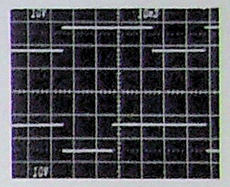

TP 6403 P.B.
TP 6404 10V/10mS

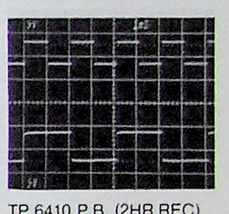

TP 6410 P.B. (2HR.REC)
TP 6411 5V/1mS)

TP 6407 P.B.
.5V/10mS

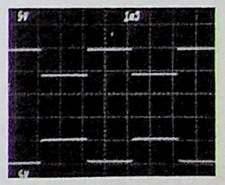

TP 6410 P.B. (4HR.REC)
TP 6411 5V/1mS

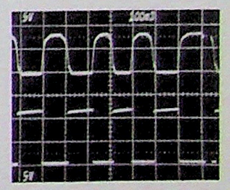

TP 6412 P.B. (2HR.REC)
TP 6413 5V.1μS

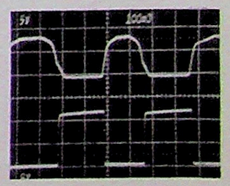

TP 6412 P.B. (4HR.REC)
TP 6413 5V/.1μS

DEMODULATOR CIRCUIT BOARD

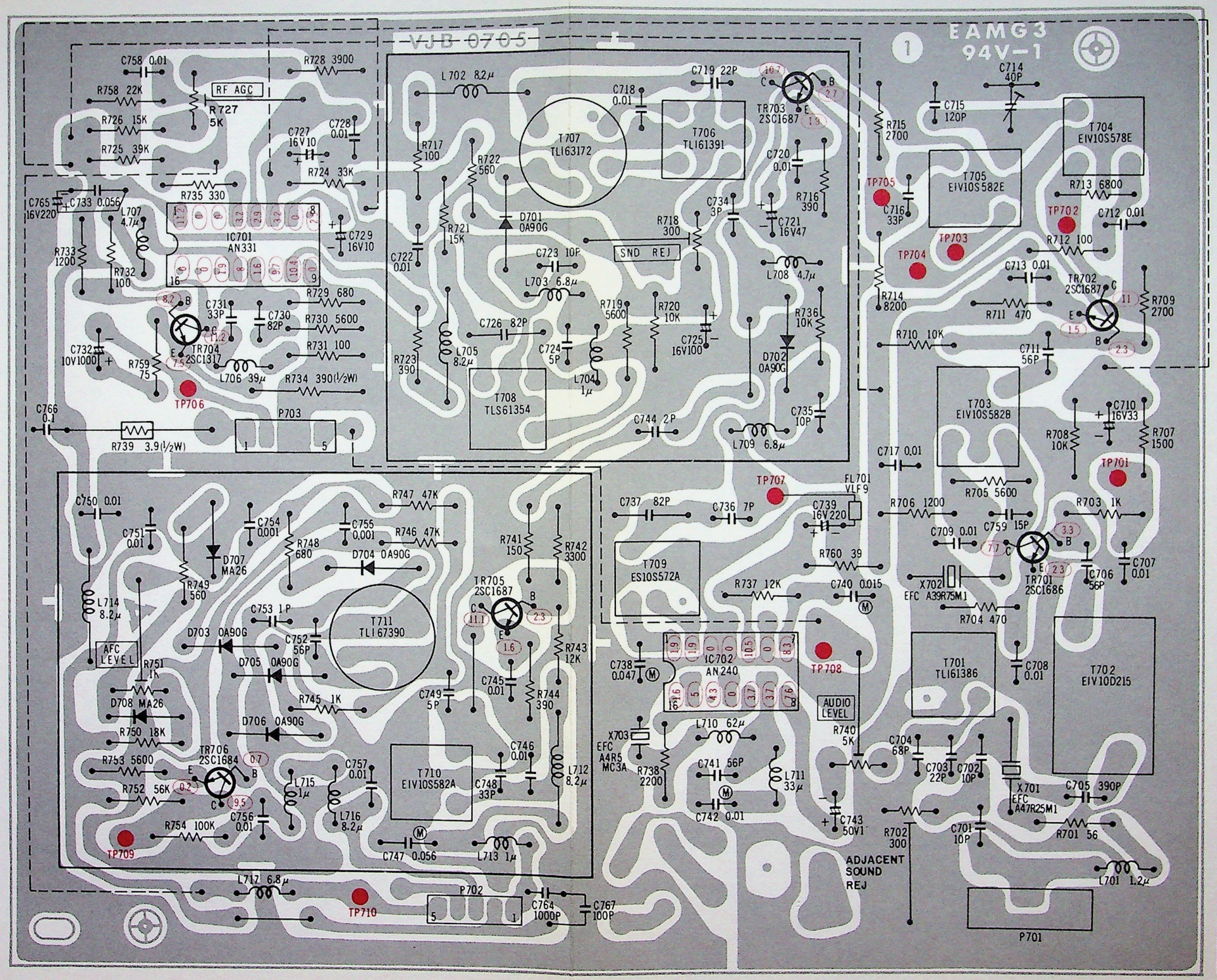

P702

AFC ON 12V	1
12V	2
AFC OUT	3
	4
RF AGC	5

P703

1	12V
2	VIDEO OUT
3	GND
4	GND
5	AUDIO OUT

VCR-1

DEMODULATOR SCHEMATIC DIAGRAM

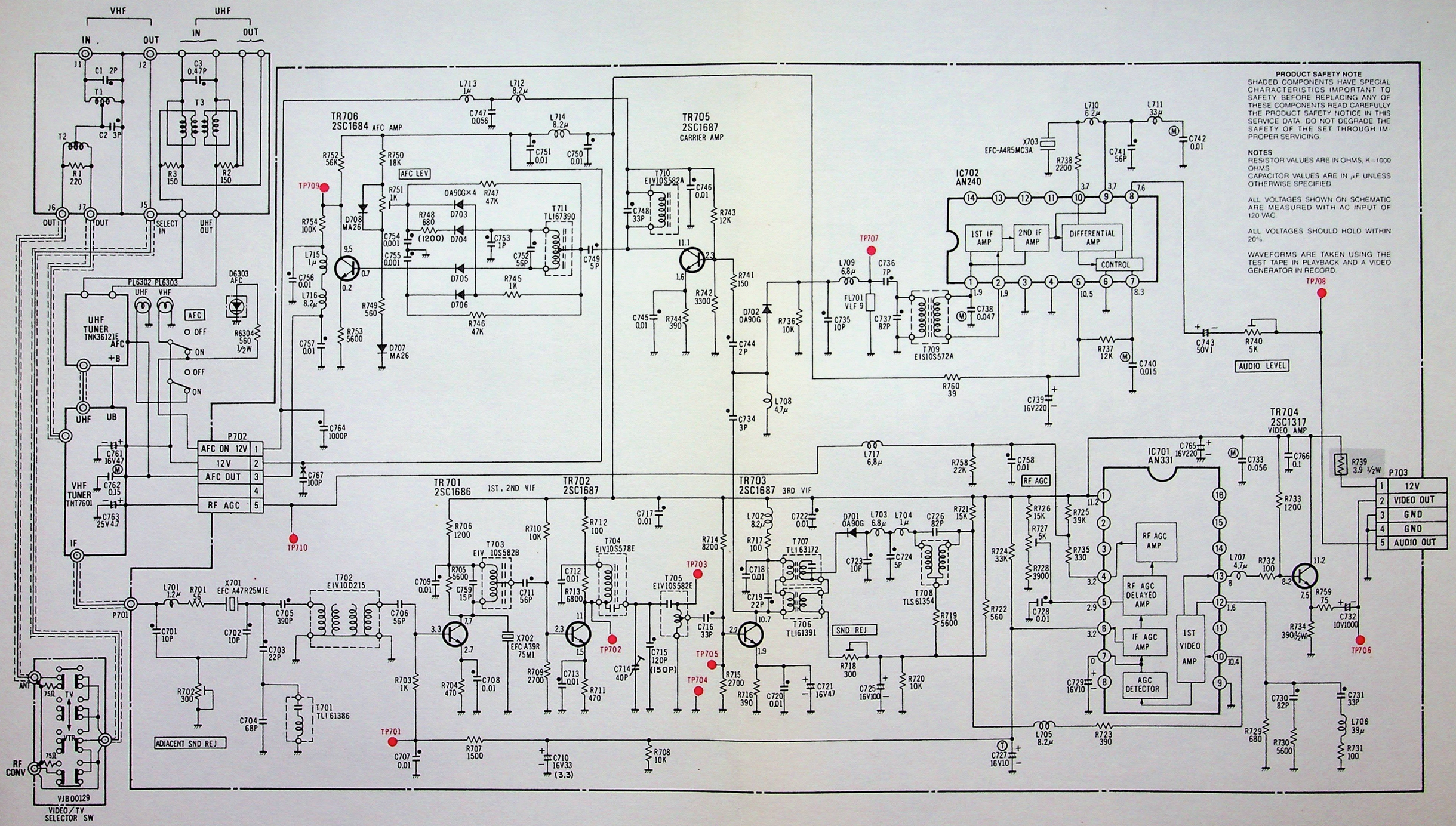

PARTIAL LUMINANCE SCHEMATICS — USED IN EARLY VERSIONS

(For Complete Schematic See Pages 5-49, 50, 51)

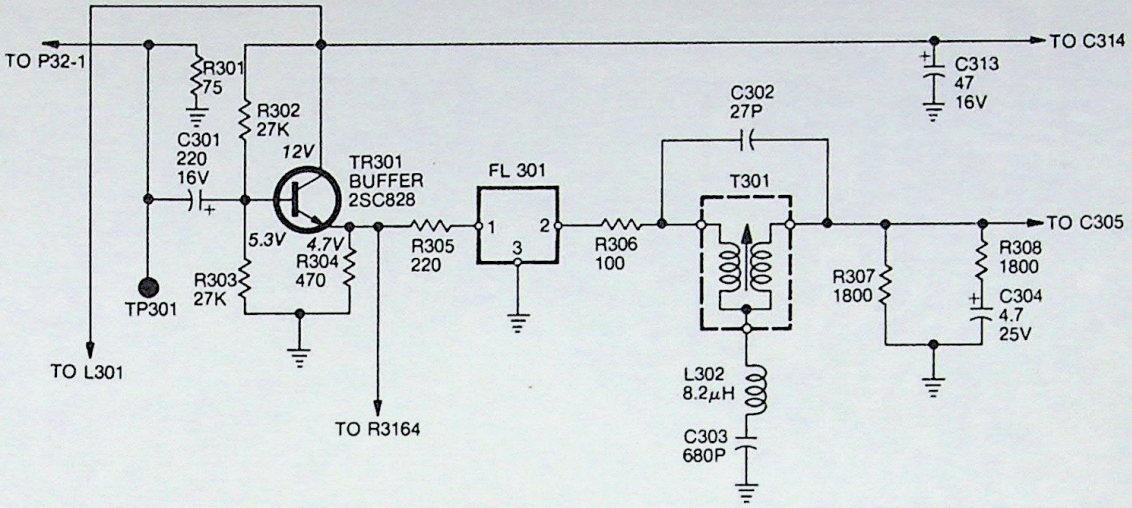

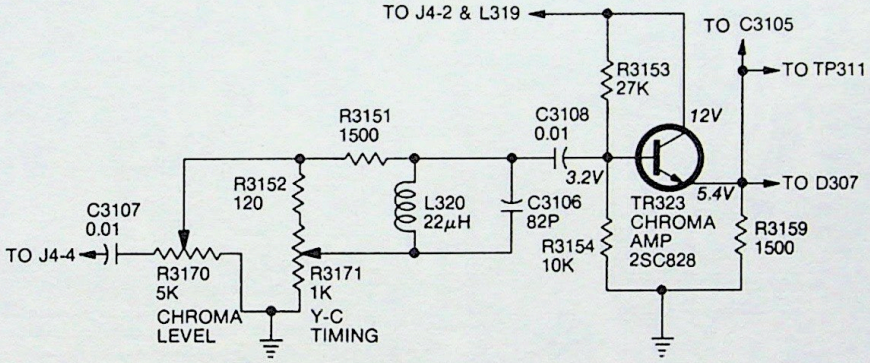

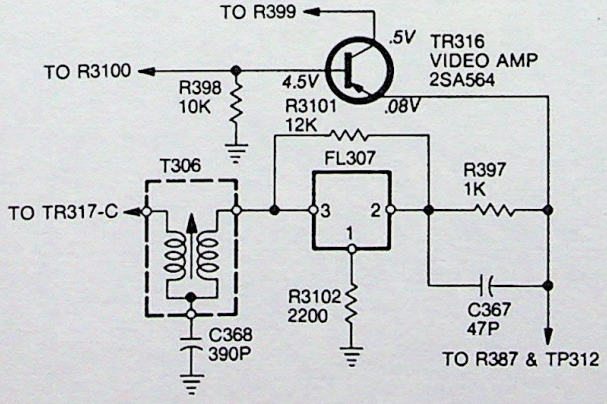

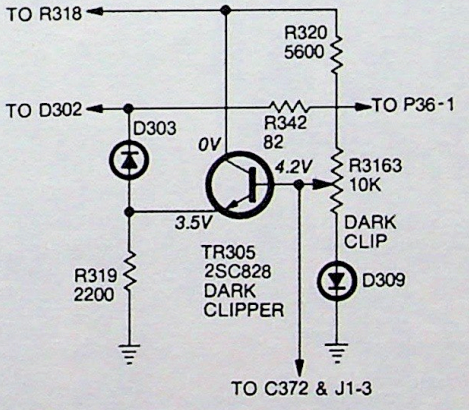

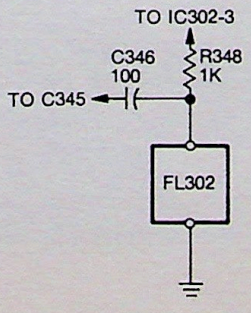

VCR-1

LUMINANCE CIRCUIT BOARD

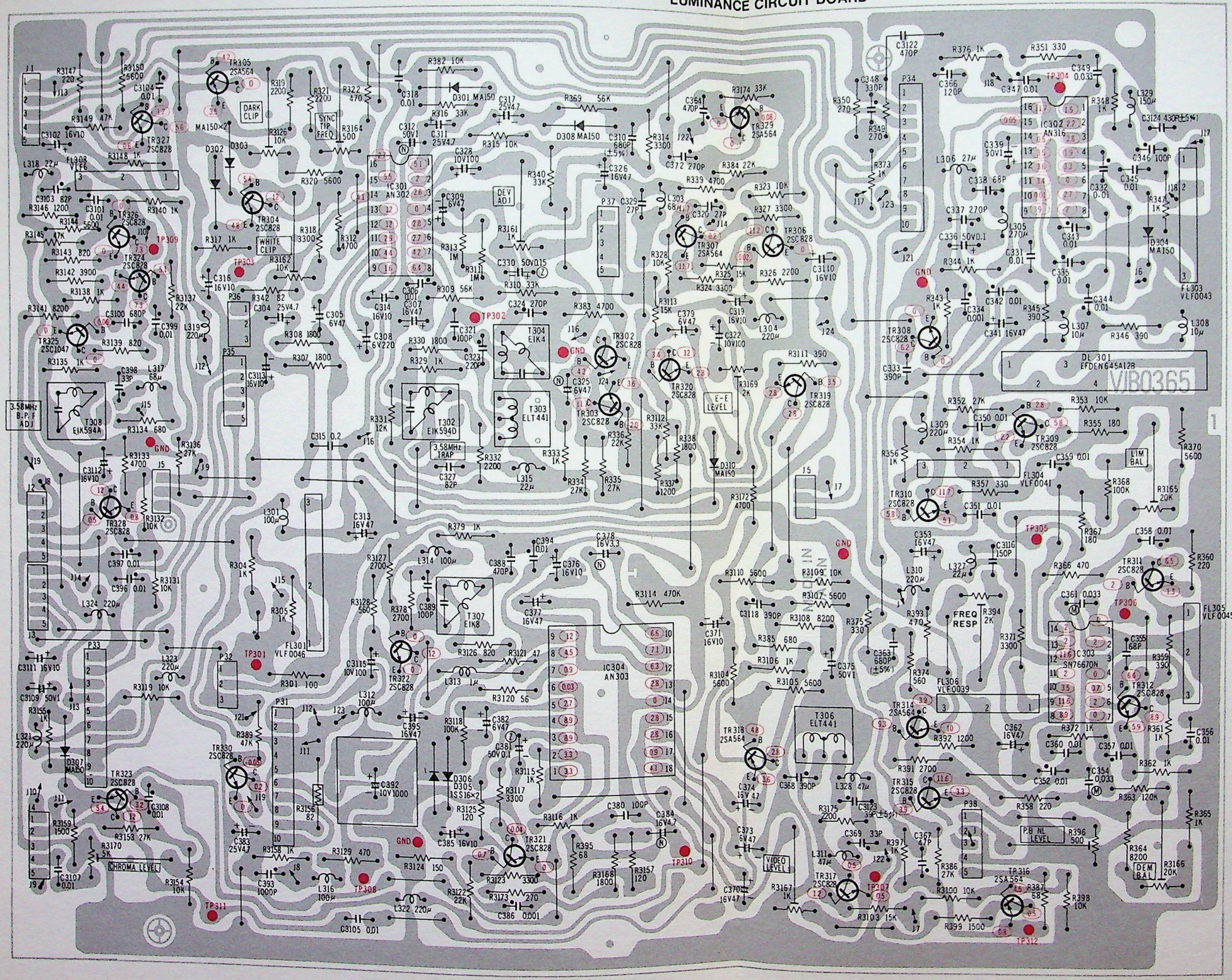

P31

1	VIDEO OUT TO RF CONV
2	GND
3	+ 12V
4	+ 12V
5	+ 12V
6	VIDEO OUT
7	GND
8	+ 12V
9	+9V OUT TO RF CONV
10	

P32

1	VIDEO IN
2	GND
3	LP HIGH IN

P36

1	EMPHASIZED VIDEO OUT
2	GND
3	GND

P37

1	VIDEO IN(N.L.E)
2	GND
3	
4	GND
5	VIDEO OUT(N.L.E)

P33

1	EXEPT REC + 12V
2	V SYNC OUT
3	REF 60Hz OUT
4	PG(30Hz) IN
5	PAUSE MUTING IN
6	GND
7	DELAYED REC +12V
8	REC + 12V
9	REC + 12V
10	E-E V-V SELECT

P38

1	VIDEO OUT(N.L.DE)
2	GND
3	EXEPT REC+12V
4	GND
5	VIDEO IN (N.L.DE)

J1

1	PG (30Hz)
2	D.O.C INHIBIT OUT
3	SYNC FRONT PULSE IN
4	+12V
5	GND

P34

1	GND
2	RF IN
3	PG(30Hz) OUT
4	+12V OUT(N.L.E)
5	EXCEPT REC +12V
6	GND
7	GND
8	LP HIGH OUT
9	+12V
10	30Hz PULSE IN

J2

1	BURST GATE PULSE IN
2	VIDEO OUT(H.S.S)
3	H.SYNC IN
4	REF 60Hz IN
5	GND

P35

1	GND
2	REC CHROMA OUT(629KHz
3	ACK OUT
4	DELAYED REC +12V
5	REC +12V

J3

1	2μS PULSE IN
2	EXEPT REC +12V
3	REC +12V
4	LP HIGH OUT
5	REC CHROMA IN

J4

1	ACC OUT
2	+12V
3	GND
4	CHROMA IN(3.58MHz)
5	ACK IN

WAVEFORMS FOR LUMINANCE SCHEMATIC

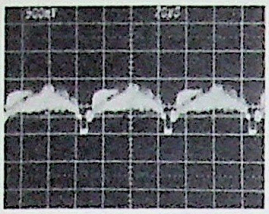

TP 301
0.5V/20 μs div.

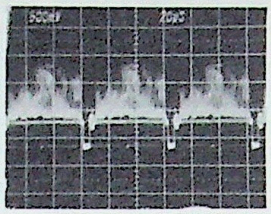

TP 302
0.5V/20 μs div.

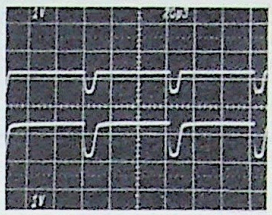

TP 303 REC
J1 ③ 1V/20 μs div.

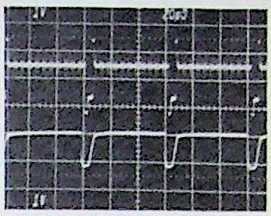

TP 303 STOP/P.B.
J1 ③ 1V/20 μs div.

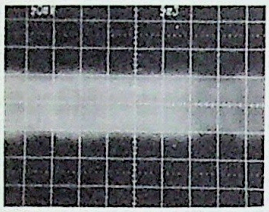

TP 304 P.B.
50 mV/5 ms div.

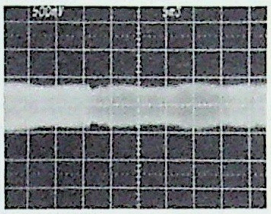

TP 305 P.B.
0.5V/5 ms div.

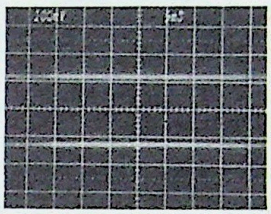

TP 306 P.B.
0.1V/5 ms div.

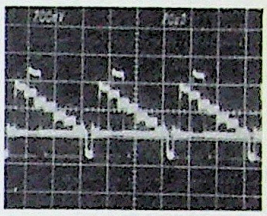

TP 307 P.B.
0.2V/20 μs div.

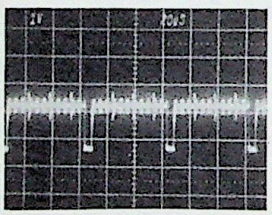

TP 308 STOP/REC
1V/20 μs div.

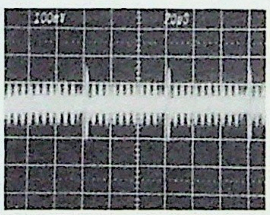

TP 309 REC
0.1V/20 μs div.

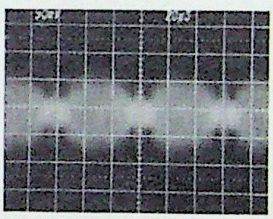

TP 309 P.B.
50 mV/20 μs div.

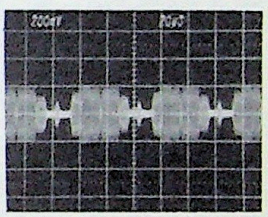

TP 311 P.B.
0.2V/20 μs div.

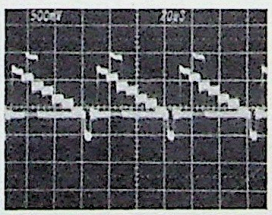

TP 312 P.B.
0.5V/20 μs div.

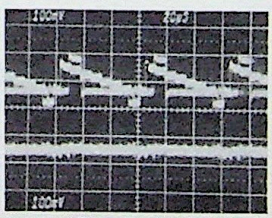

IC 304 ⑯ P.B.
TP 310 (IC 304 ⑮)
0.1V/20 μs div.

Luminance Schematic Diagram

(Serial No. 8033FM001 and Later — See Page 5-45 For Partial Schematics)

VCR-1

PRODUCT SAFETY NOTE
SHADED COMPONENTS HAVE SPECIAL CHARACTERISTICS IMPORTANT TO SAFETY. BEFORE REPLACING ANY OF THESE COMPONENTS READ CAREFULLY THE PRODUCT SAFETY NOTICE IN THIS SERVICE DATA. DO NOT DEGRADE THE SAFETY OF THE SET THROUGH IMPROPER SERVICING.

NOTES
RESISTOR VALUES ARE IN OHMS, K = 1000 OHMS
CAPACITOR VALUES ARE IN µF UNLESS OTHERWISE SPECIFIED.

ALL VOLTAGES SHOWN ON SCHEMATIC ARE MEASURED WITH AC INPUT OF 120 VAC.

ALL VOLTAGES SHOULD HOLD WITHIN 20%.

WAVEFORMS ARE TAKEN USING THE TEST TAPE IN PLAYBACK AND A VIDEO GENERATOR IN RECORD.

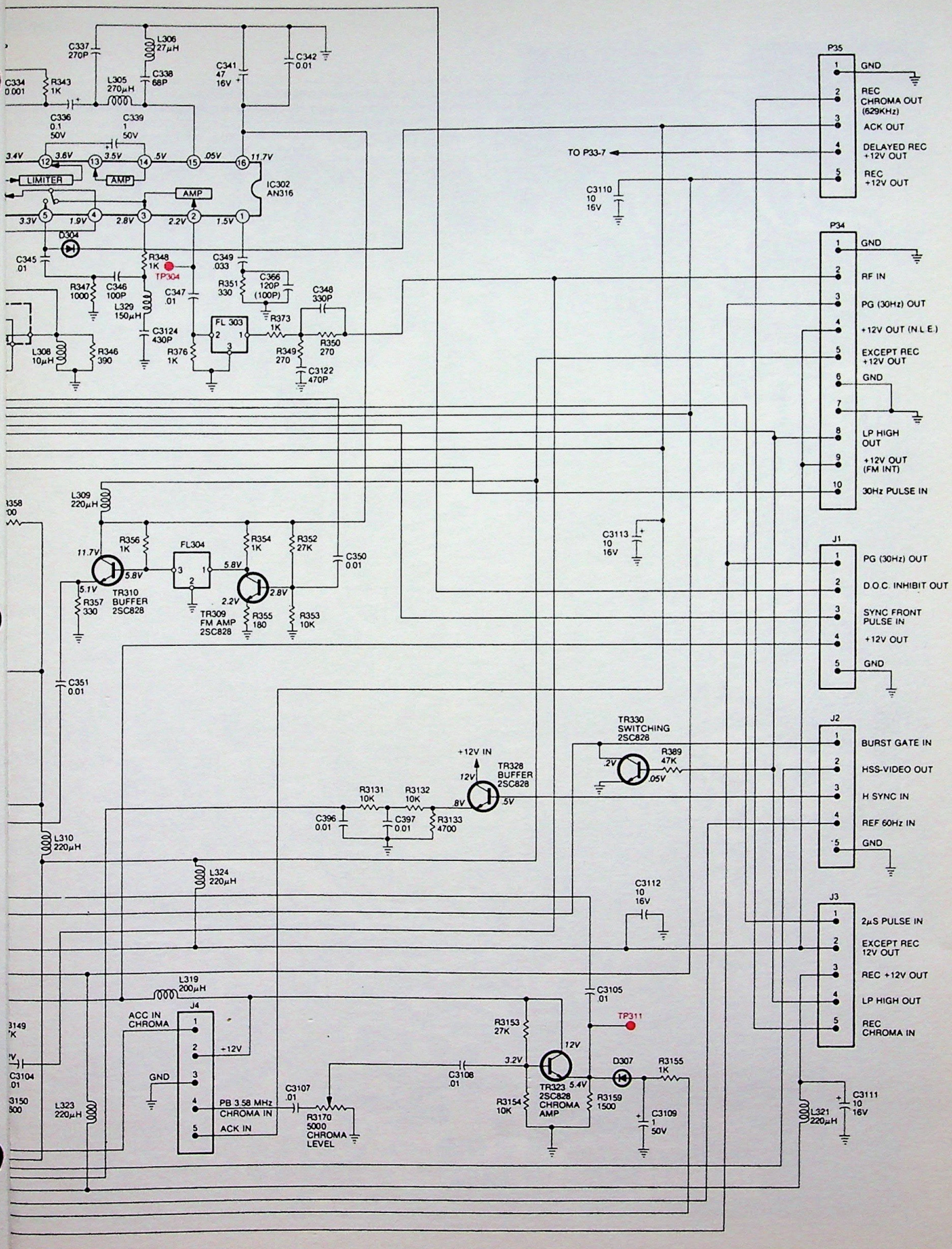
C337 270P
L306 27µH
C338 68P
C341 47 16V
C342 0.01
C334 0.001
R343 1K
L305 270µH
C336 0.1 50V
C339 1 50V
3.4V
3.6V
3.5V
.5V
.05V
11.7V
LIMITER
AMP
AMP
IC302 AN316
3.3V
1.9V
2.8V
2.2V
1.5V
D304
C345 .01
R348 1K
TP304
C349 .033
C366 120P (100P)
R347 1000
C346 100P
R351 330
C348 330P
L329 150µH
C347 .01
FL 303
R373 1K
C3124 430P
L308 10µH
R346 390
R376 1K
R349 270
R350 270
C3122 470P
TO P33-7
C3110 10 16V
P35
GND
REC CHROMA OUT (629KHz)
ACK OUT
DELAYED REC +12V OUT
REC +12V OUT
P34
GND
RF IN
PG (30Hz) OUT
+12V OUT (N.L.E.)
EXCEPT REC +12V OUT
GND
LP HIGH OUT
+12V OUT (FM INT)
30Hz PULSE IN
L309 220µH
R356 1K
FL304
R354 1K
R352 27K
C350 0.01
11.7V
5.8V
5.8V
5.1V
TR310 BUFFER 2SC828
R357 330
2.2V
2.8V
TR309 FM AMP 2SC828
R355 180
R353 10K
C3113 10 16V
J1
PG (30Hz) OUT
D.O.C. INHIBIT OUT
SYNC FRONT PULSE IN
+12V OUT
GND
C351 0.01
TR330 SWITCHING 2SC828
+12V IN
TR328 BUFFER 2SC828
R389 47K
.2V
.05V
12V
.8V
.5V
R3131 10K
R3132 10K
C396 0.01
C397 0.01
R3133 4700
J2
BURST GATE IN
HSS-VIDEO OUT
H SYNC IN
REF 60Hz IN
GND
L310 220µH
L324 220µH
C3112 10 16V
J3
2µS PULSE IN
EXCEPT REC 12V OUT
REC +12V OUT
LP HIGH OUT
REC CHROMA IN
L319 200µH
C3105 01
TP311
R3153 27K
12V
3.2V
D307
R3155 1K
C3108 .01
R3154 10K
TR323 2SC828 CHROMA AMP
5.4V
R3159 1500
C3109 1 50V
C3111 10 16V
L321 220µH
J4
ACC IN CHROMA
+12V
GND
PB 3.58 MHz CHROMA IN
ACK IN
C3107 .01
R3170 5000 CHROMA LEVEL
C3104 .01
L323 220µH

VCR-1

CHROMA CIRCUIT BOARD

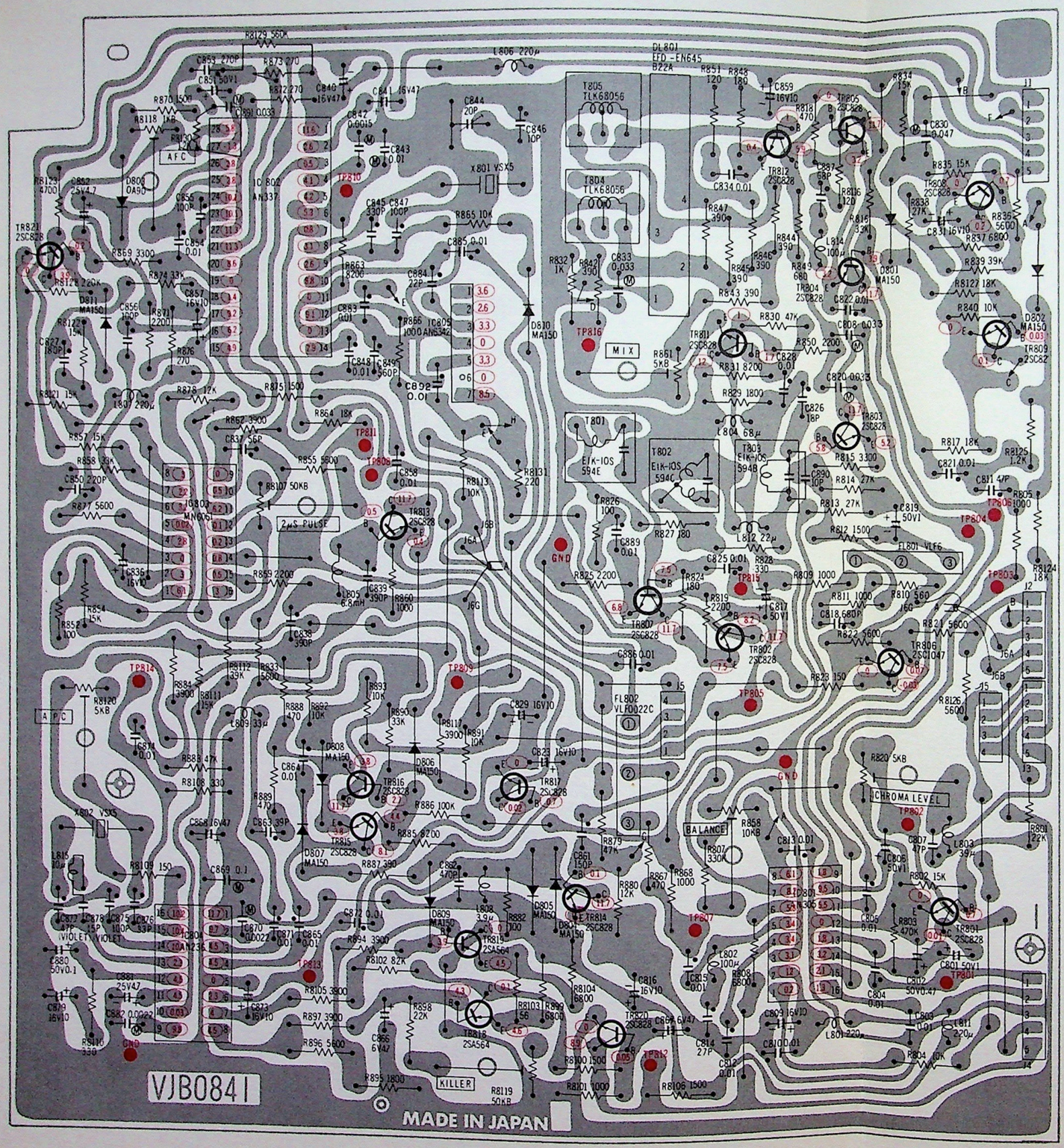

J1	
1	PG (30Hz) IN
2	DOC INHIBIT IN
3	SYNC FRONT PULSE
4	+12V
5	GND

J2	
1	BURST GATE PULSE OUT
2	VIDEO IN(FOR H.S.S.)
3	H. SYNC OUT
4	REF 60Hz OUT
5	GND

J3	
1	2μS PULSE OUT
2	EXCEPT REC +12
3	REC +12
4	LP HIGH IN
5	REC CHROMA OUT

J4	
1	ACC IN
2	+12V
3	GND
4	3.58MHZ CHROMA OUT
5	ACK OUT

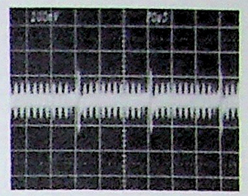

TP 801 2 HR. REC
0.1V/20 μs div.

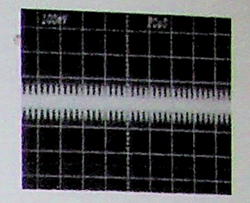

TP 801 4 HR. REC
0.1V/20 μs div.

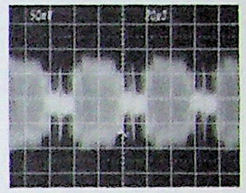

TP 801 P.B.
50 mV/20 μs div.

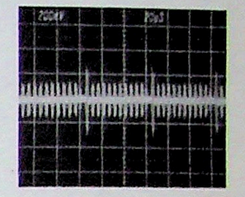

TP 802 2 HR. REC
0.2V/20 μs div.

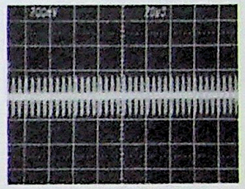

TP 802 4 HR. REC
0.2V/20 μs div.

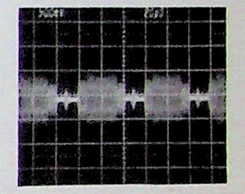

TP 802 P.B.
0.5V/20 μs div.

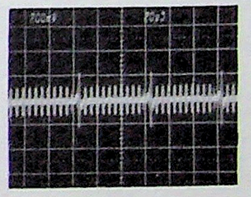

TP 803 2 HR. REC
0.2V/20 μs div.

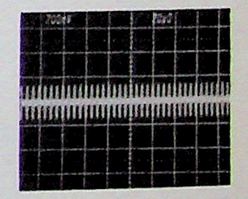

TP 803 4 HR. REC
0.2V/20 μs div.

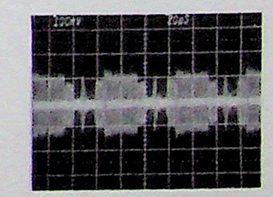

TP 803 2 HR. P.B.
0.1V/20 μs div.

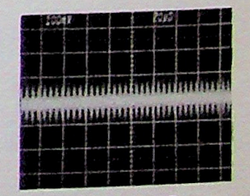

TP 803 4 HR. P.B.
0.1V/20 μs div.

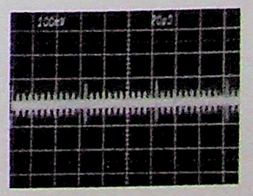

TP 804 2 HR. REC
0.1V/20 μs div.

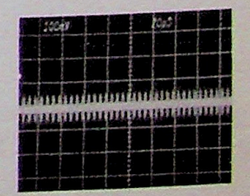

TP 804 4 HR. REC
0.1V/20 μs div.

WAVEFORMS FOR CHROMA SCHEMATIC

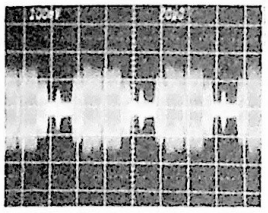

TP 804 2 HR. P.B.
0.1V/20 μs div.

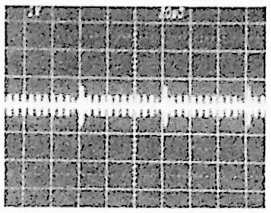

TP 805 2 HR. REC
1V/20 μs div.

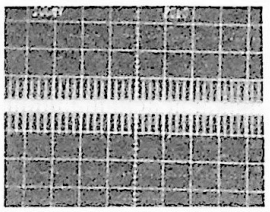

TP 805 4 HR. REC
0.1V/20 μs div.

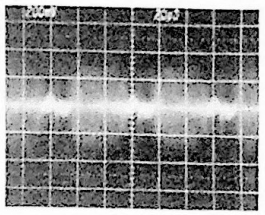

TP 805 2 HR. P.B.
0.2V/20 μs div.

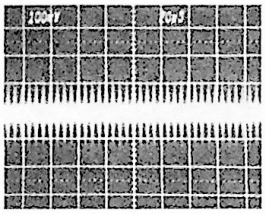

TP 805 4 HR. P.B.
0.1V/20 μs div.

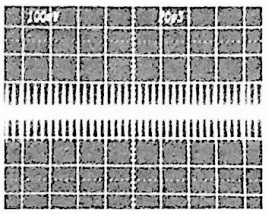

TP 806 4 HR. REC
0.1V/20 μs div.

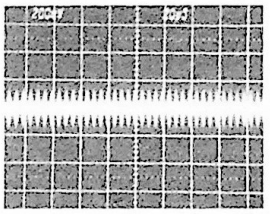

TP 806 4 HR. P.B.
0.2V/20 μs div.

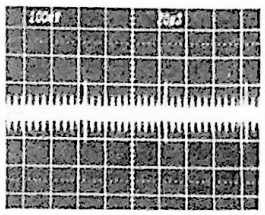

TP 806 2 HR. REC
0.1V/20 μs div.

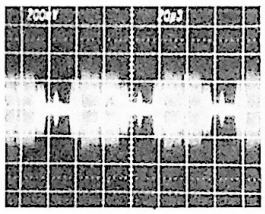

TP 806 2 HR. P.B.
0.2V/20 μs div.

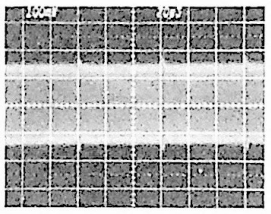

TP 807
0.1V/20 μs div.

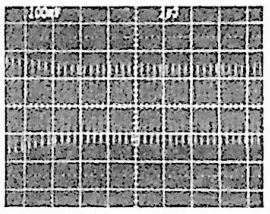

TP 807
0.1V/1 μs div.

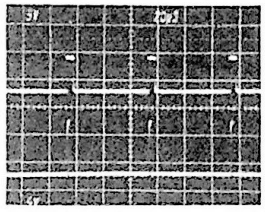

TP 808, TP 811
5V/20 μs div.

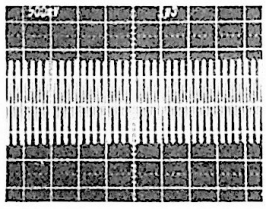

TP 809 STOP/P.B.
0.5V/1 μs div.

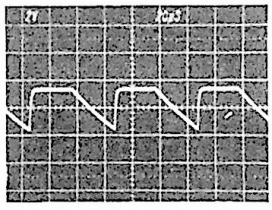

TP 810
2V/20 μs div.

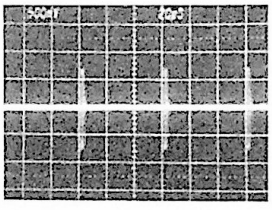

TP 813 REC
0.5V/20 μs div.

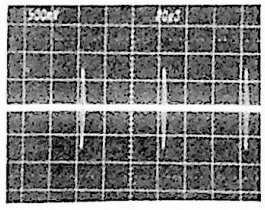

TP 813 P.B.
0.5V/20 μs div.

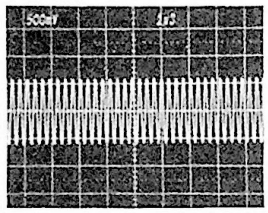

TP 814
0.5V/1 μs div.

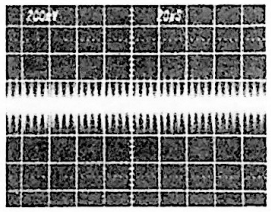

TP 815 4 HR. P.B.
0.2V/20 μs div.

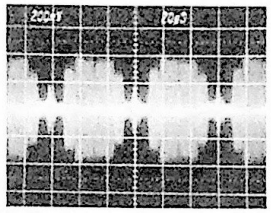

TP 815 2 HR. P.B.
0.2V/20 μs div.

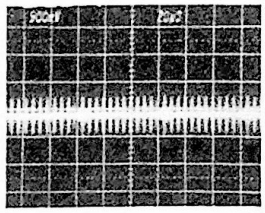

TP 815 REC
0.5V/20 μs div.

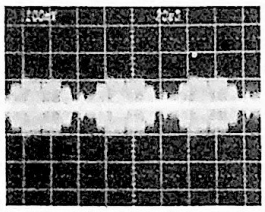

TP 816 P.B. (2 HR. REC)
0.1V/20 μs div.

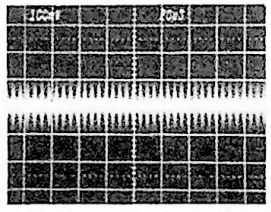

TP 816 P.B. (4 HR. REC)
0.1V/20 μs div.

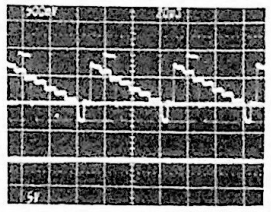

J2 ⑦
0.5V/20 μs div.
TP 808 5V/20 μs div.

Chroma Schematic Diagram

(Serial No. 8033FM001 and Later — See Page 5-60 For Partial Schematics)

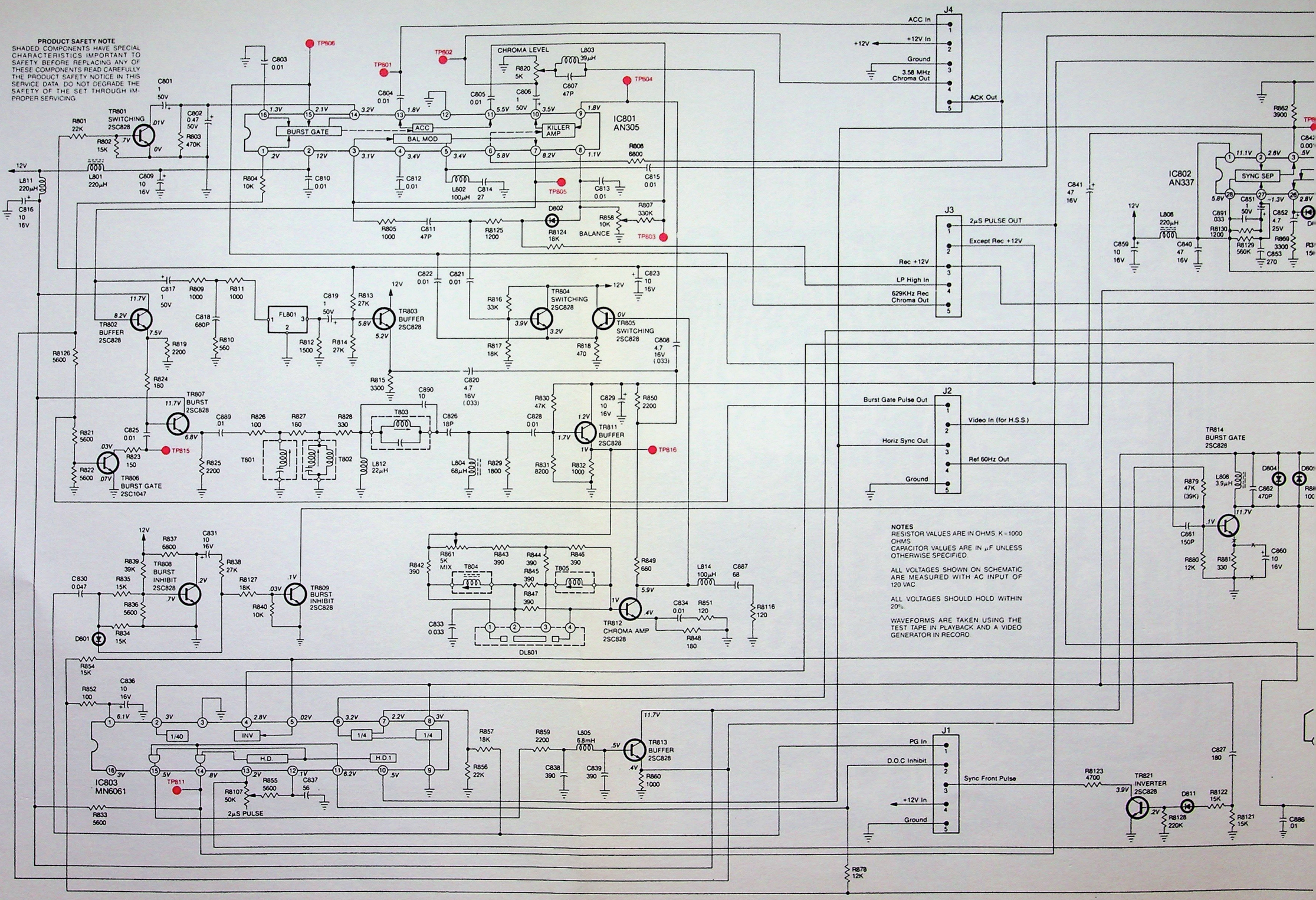

NOTES
RESISTOR VALUES ARE IN OHMS, K = 1000 OHMS
CAPACITOR VALUES ARE IN μF UNLESS OTHERWISE SPECIFIED.

ALL VOLTAGES SHOWN ON SCHEMATIC ARE MEASURED WITH AC INPUT OF 120 VAC.

ALL VOLTAGES SHOULD HOLD WITHIN 20%.

WAVEFORMS ARE TAKEN USING THE TEST TAPE IN PLAYBACK AND A VIDEO GENERATOR IN RECORD.

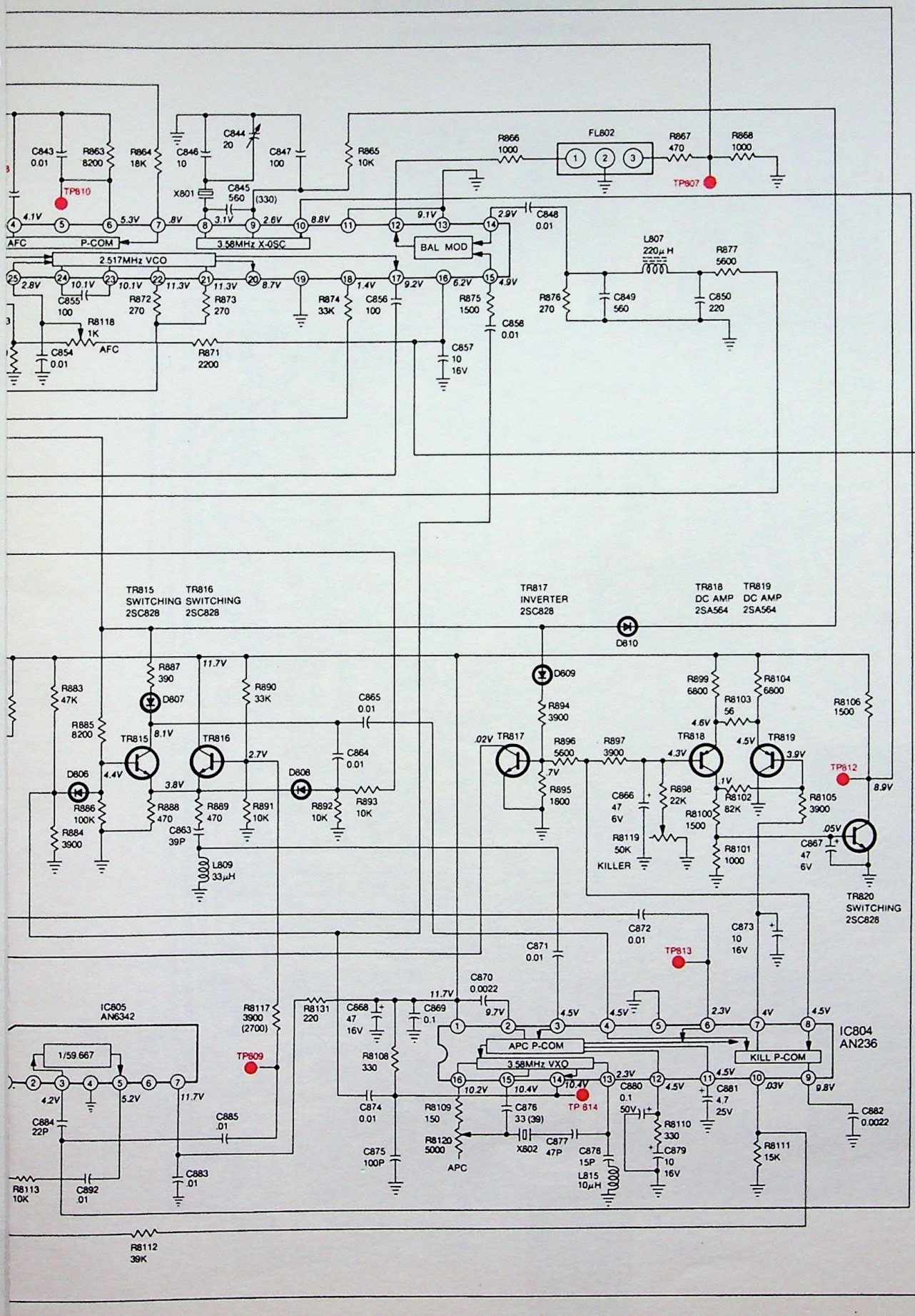
C843 0.01
R863 8200
R864 18K
C846 10
C844 20
C847 100
R865 10K
X801
C845 560 (330)
TP810
4.1V
5.3V
.8V
3.1V
2.6V
8.8V
9.1V
2.9V
C848 0.01
R866 1000
FL802
R867 470
R868 1000
TP807
AFC
P-COM
3.58MHz X-OSC
BAL MOD
2.517MHz VCO
L807 220μH
R877 5600
2.8V
10.1V
10.1V
11.3V
11.3V
8.7V
1.4V
9.2V
6.2V
4.9V
C855 100
R872 270
R873 270
R874 33K
C856 100
R875 1500
C858 0.01
R876 270
C849 560
C850 220
R8118 1K
AFC
C854 0.01
R871 2200
C857 10 16V
TR815 SWITCHING 2SC828
TR816 SWITCHING 2SC828
TR817 INVERTER 2SC828
TR818 DC AMP 2SA564
TR819 DC AMP 2SA564
D810
D609
R887 390
D807
11.7V
R890 33K
C865 0.01
R883 47K
R885 8200
8.1V
TR815
TR816
2.7V
C864 0.01
D806
4.4V
3.8V
D808
R886 100K
R884 3900
R888 470
R889 470
R891 10K
R892 10K
R893 10K
C863 39P
L809 33μH
.02V
TR817
R894 3900
R896 5600
7V
R895 1800
R897 3900
R899 6800
R8103 56
R8104 6800
R8106 1500
4.6V
TR818
4.3V
4.5V
TR819
3.9V
TP812
8.9V
1V
R8102 82K
R8105 3900
C866 47 6V
R898 22K
R8100 1500
R8119 50K KILLER
R8101 1000
.05V
C867 47 6V
TR820 SWITCHING 2SC828
C872 0.01
C873 10 16V
C871 0.01
TP813
C870 0.0022
11.7V
9.7V
4.5V
4.5V
2.3V
4V
4.5V
IC805 AN6342
R8117 3900 (2700)
R8131 220
C868 47 16V
C869 0.1
IC804 AN236
APC P-COM
KILL P-COM
3.58MHz VXO
1/59.667
TP809
R8108 330
2.3V
4.5V
.03V
9.8V
4.2V
5.2V
11.7V
10.2V
10.4V
10.4V
TP 814
C880 0.1 50V
C881 4.7 25V
C882 0.0022
C884 22P
C885 .01
C874 0.01
R8109 150
C876 33 (39)
R8110 330
C879 10 16V
C875 100P
R8120 5000
APC
X802
C877 47P
C878 15P
L815 10μH
R8111 15K
R8113 10K
C892 .01
C883 .01
R8112 39K

AUDIO SCHEMATIC DIAGRAM

(Up To Serial No. 8033FM001)

PRODUCT SAFETY NOTE
SHADED COMPONENTS HAVE SPECIAL CHARACTERISTICS IMPORTANT TO SAFETY. BEFORE REPLACING ANY OF THESE COMPONENTS READ CAREFULLY THE PRODUCT SAFETY NOTICE IN THIS SERVICE DATA. DO NOT DEGRADE THE SAFETY OF THE SET THROUGH IMPROPER SERVICING.

NOTES
RESISTOR VALUES ARE IN OHMS, K=1000 OHMS
CAPACITOR VALUES ARE IN μF UNLESS OTHERWISE SPECIFIED

ALL VOLTAGES SHOWN ON SCHEMATIC ARE MEASURED WITH AC INPUT OF 120 VAC

ALL VOLTAGES SHOULD HOLD WITHIN 20%.

WAVEFORMS ARE TAKEN USING THE TEST TAPE IN PLAYBACK AND A VIDEO GENERATOR IN RECORD.

Measure the voltages of transistors and ICs in the 2Hr./REC mode.

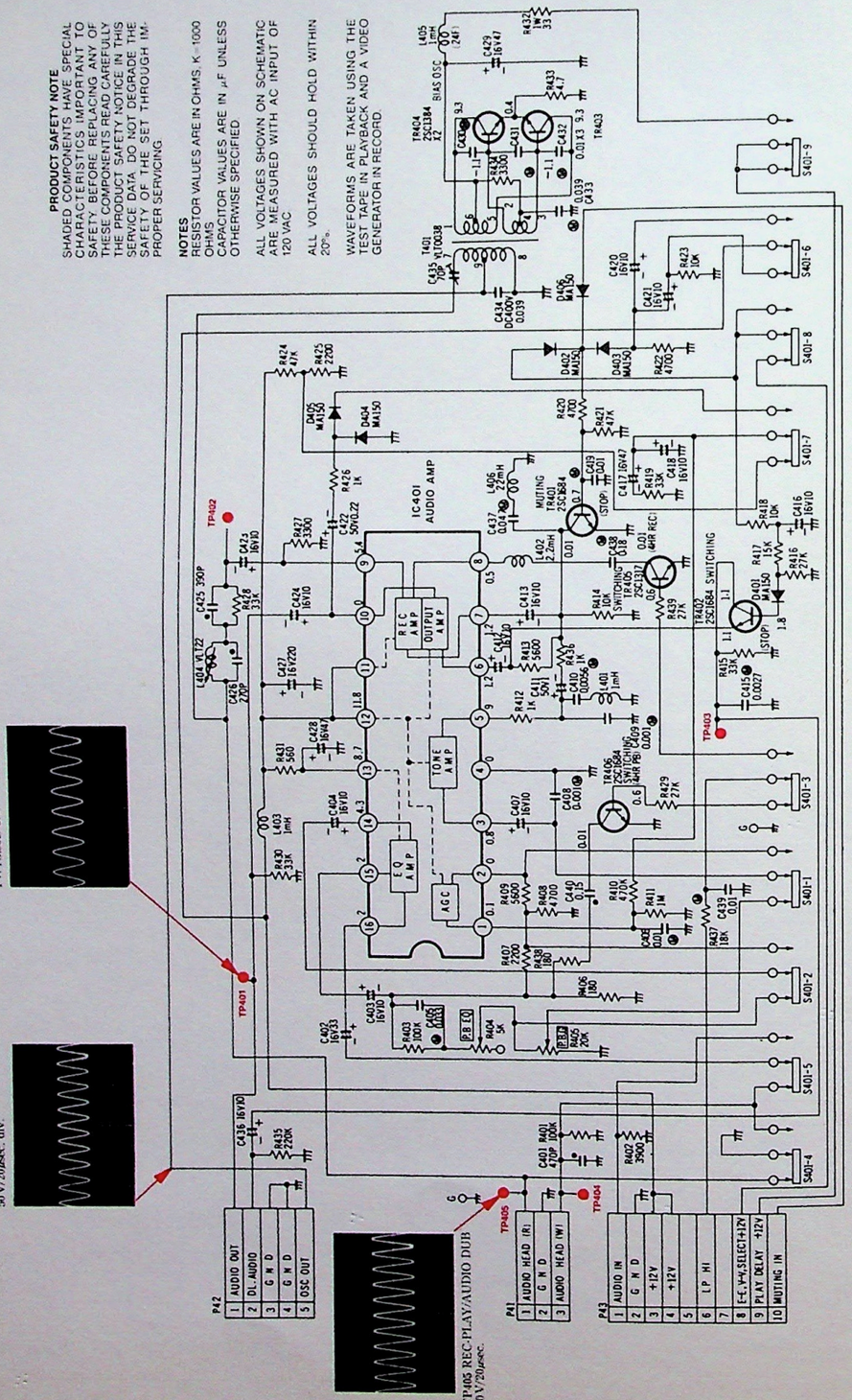

AUDIO CIRCUIT BOARD

(Up To Serial No. 8033FM001)

P43

10	MUTING IN
9	PLAY DELAY +12V
8	E-E, V-V SELECT +12V
7	
6	LP HI
5	
4	+12V
3	12V
2	GND
1	AUDIO IN

P41

3	AUDIO HEAD (W)
2	GND
1	AUDIO HEAD (R)

P42

1	AUDIO OUT
2	DL AUDIO
3	GND
4	GND
5	OSC OUT

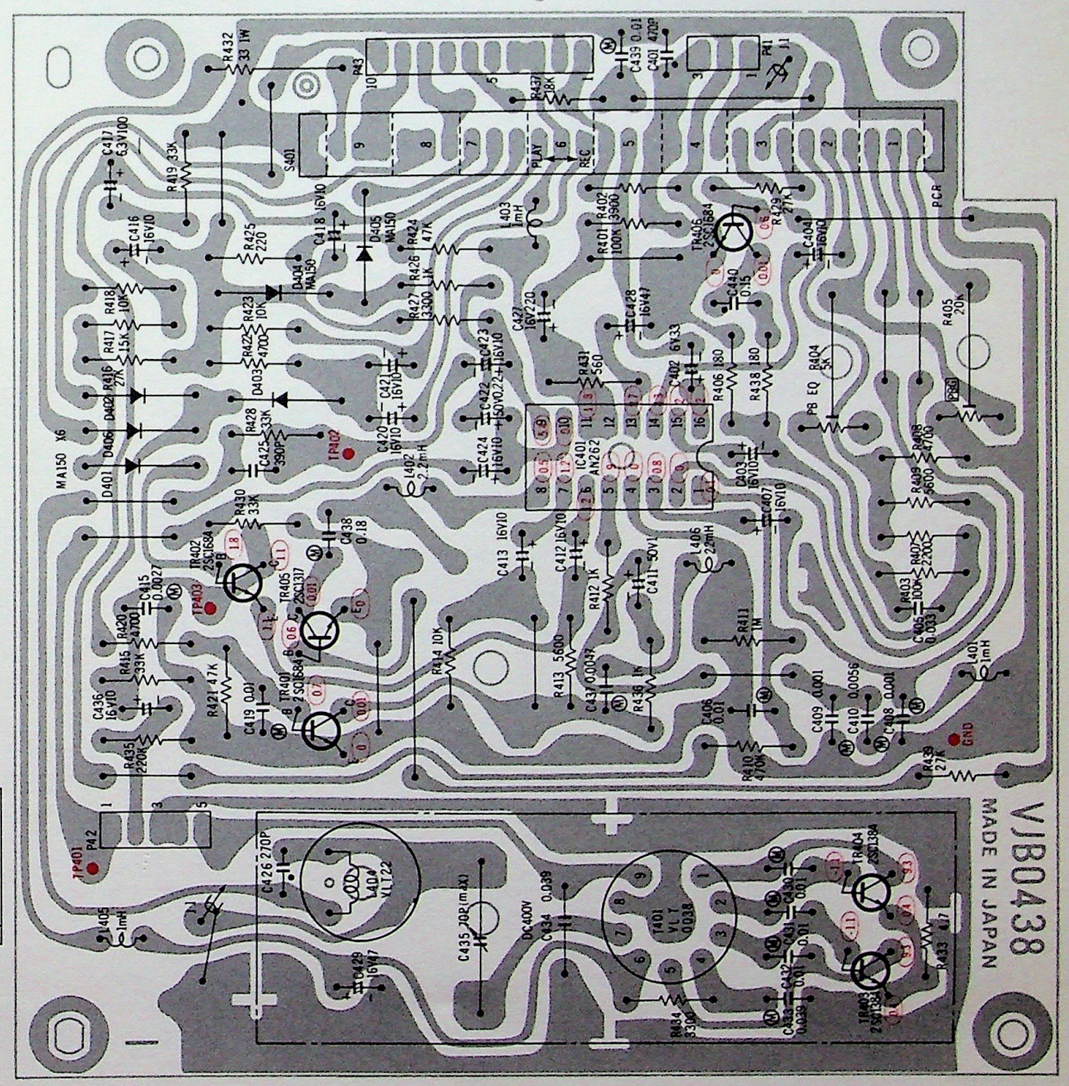

PARTIAL CHROMA SCHEMATICS — USED IN EARLY VERSIONS

(For Complete Schematic See Pages 5-55, 56, 57)

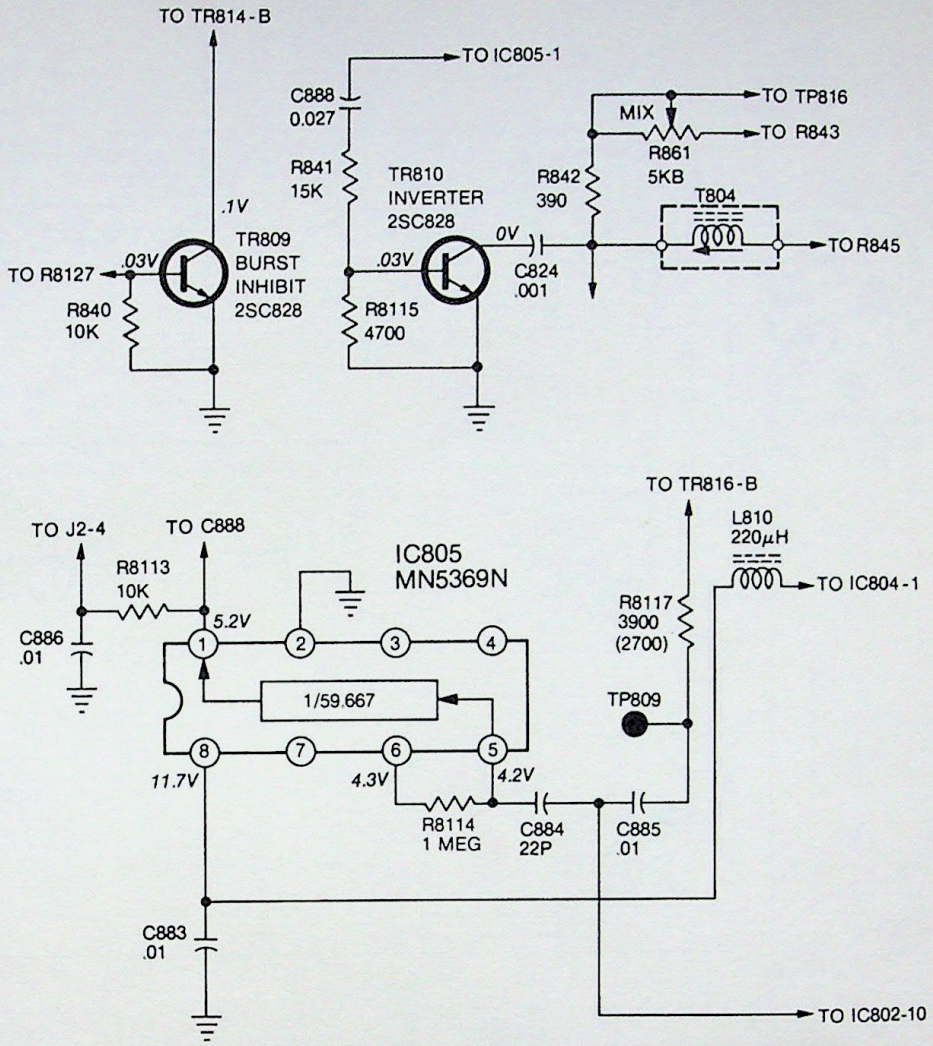

PARTIAL SP/LP SCHEMATIC — USED IN EARLY VERSIONS

(For Complete Schematic See Pages 5-39, 40)

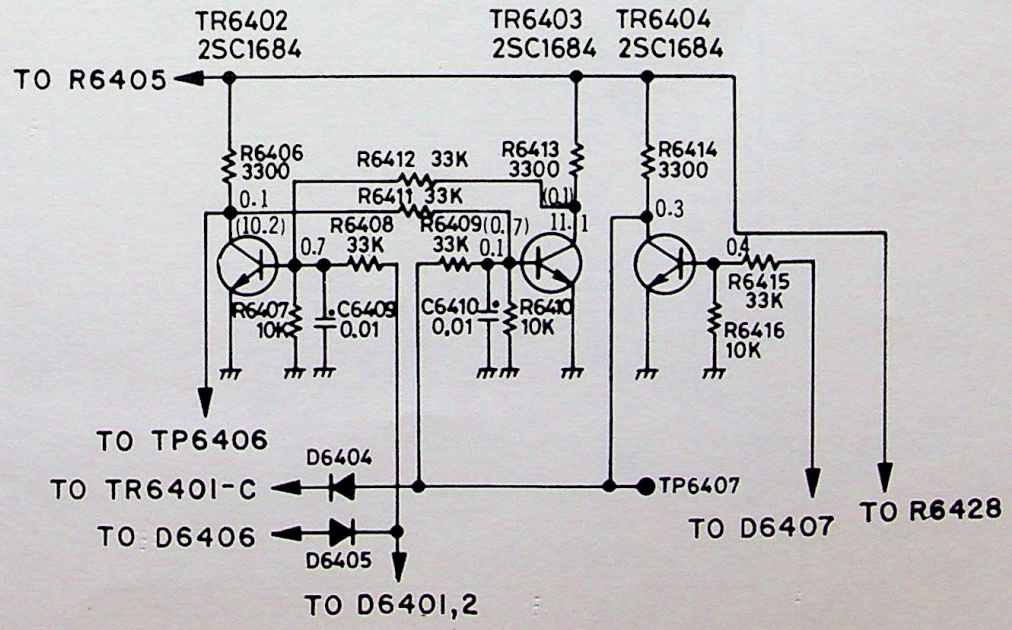

LUMINANCE SUB PROCESS SCHEMATIC DIAGRAM

(Up To Serial No. 8033FM001)

PRODUCT SAFETY NOTE

SHADED COMPONENTS HAVE SPECIAL CHARACTERISTICS IMPORTANT TO SAFETY. BEFORE REPLACING ANY OF THESE COMPONENTS READ CAREFULLY THE PRODUCT SAFETY NOTICE IN THIS SERVICE DATA. DO NOT DEGRADE THE SAFETY OF THE SET THROUGH IMPROPER SERVICING.

NOTES

RESISTOR VALUES ARE IN OHMS, K=1000 OHMS
CAPACITOR VALUES ARE IN μF UNLESS OTHERWISE SPECIFIED.

ALL VOLTAGES SHOWN ON SCHEMATIC ARE MEASURED WITH AC INPUT OF 120 VAC.

ALL VOLTAGES SHOULD HOLD WITHIN 20%.

WAVEFORMS ARE TAKEN USING THE TEST TAPE IN PLAYBACK AND A VIDEO GENERATOR IN RECORD.

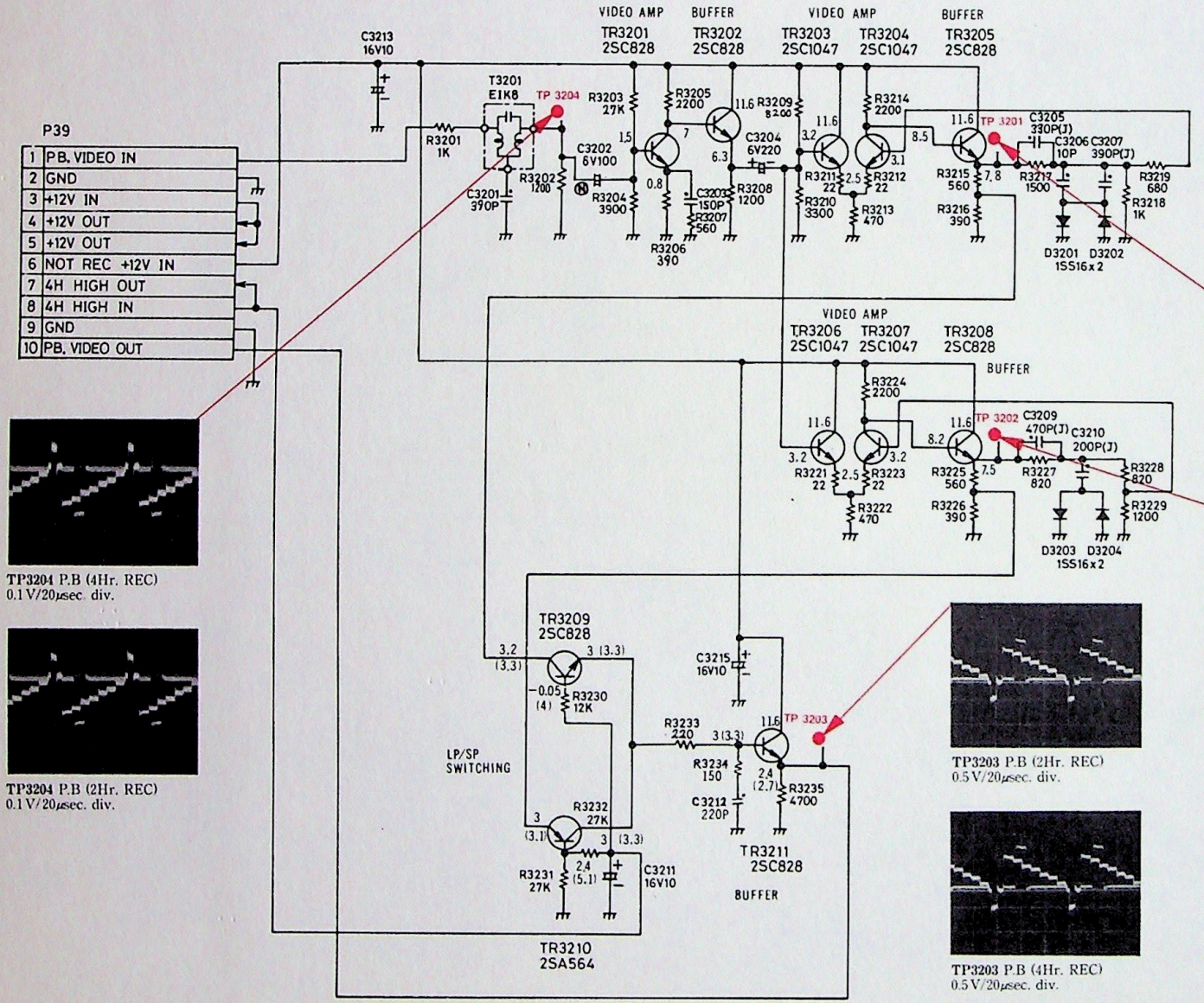

TP3204 P.B (4Hr. REC)
0.1 V/20μsec. div.

TP3204 P.B (2Hr. REC)
0.1 V/20μsec. div.

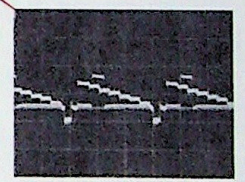

TP3201 P.B (4Hr. REC)
2 V/20μsec. div.

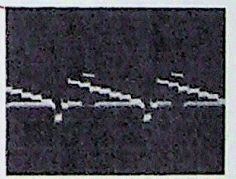

TP3202 P.B (2Hr. REC)
2V/20μsec. div.

TP3203 P.B (2Hr. REC)
0.5 V/20μsec. div.

TP3203 P.B (4Hr. REC)
0.5 V/20μsec. div.

Note. Measure the voltages of transistors in 2 Hr. / P.B mode. The voltages indicated in brackets ( ) are measured in 4 Hr. / P.B mode.

Luminance SUB PROCESS CIRCUIT BOARD

(Up To Serial No. 8033FM001)

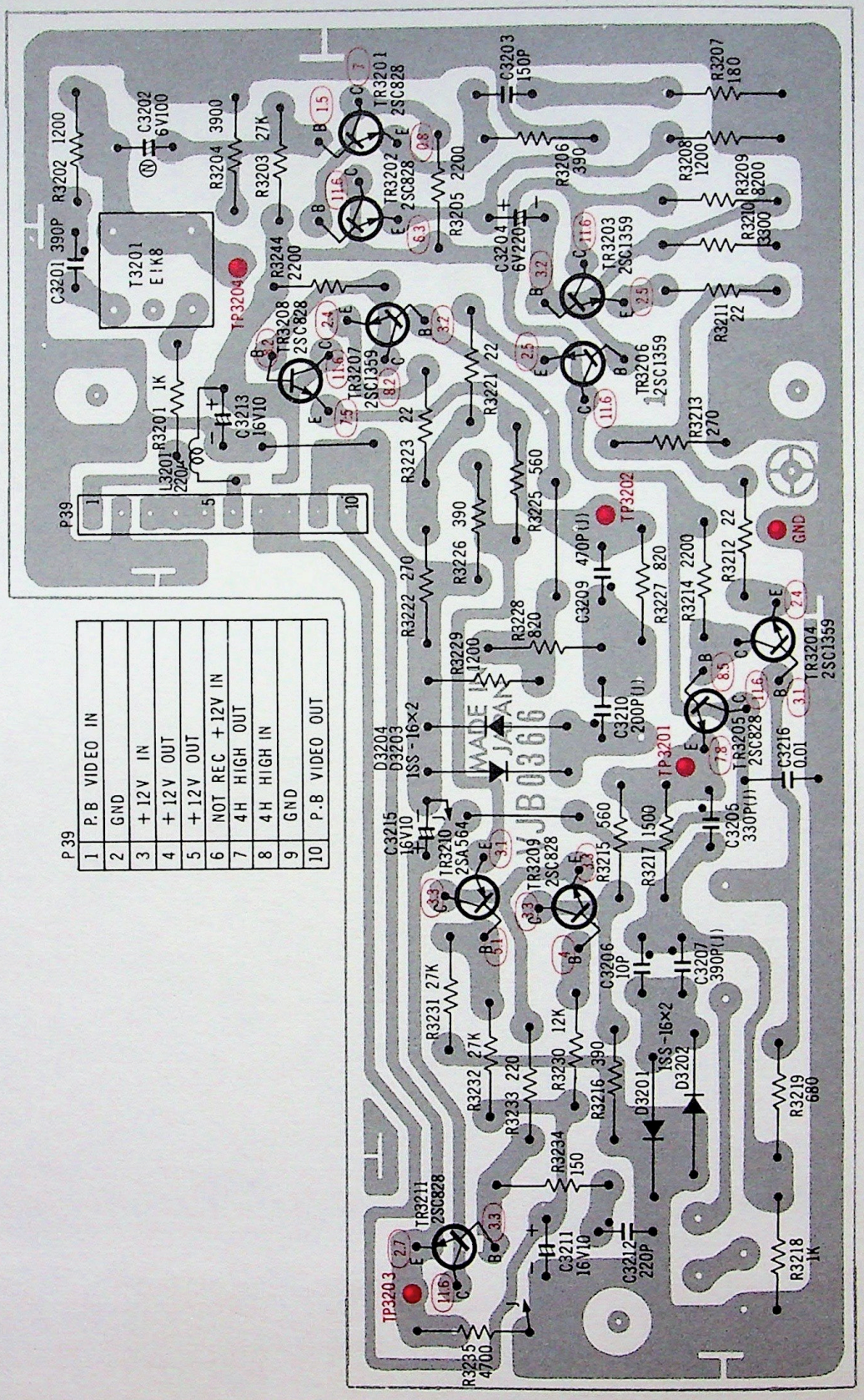

P. W. B—PRINTED WIRING BOARD
V. HEAD—VIDEO HEAD
P. G.—PULSE GENERATOR
LP—LONG PLAY (4 HOUR MODE)
SP—STANDARD PLAY (2 HOUR MODE)
ACK—AUTOMATIC COLOR KILLER
NL—NON-LINEAR
V SYNC—VERTICAL SYNC
E-E—ELECTRIC TO ELECTRIC
V-V—VIDEO HEAD TO VIDEO HEAD
FG—FREQUENCY GENERATOR
CTL—CONTROL
AE—AUDIO ERASE
FE—FULL ERASE
CAP M—CAPSTAN MOTOR
CYL LOCK—CYLINDER LOCK
DL—DELAYED
REMOCON—REMOTE CONTROL
P. TR—POWER TRANSISTOR
P. SOLENOID—PRESSURE ROLLER SOLENOID
P1, P2, P3—POSITION COILS (CYLINDER MOTOR)
M1, M2, M3—MAIN COILS (CYLINDER MOTOR)

RF CONV
VJB 0706

RF CONVERTER CONNECTION P. W. B. (VJB 00224)
J6305
14 RF OUT
13 GND
8
7
6
5
4
2
P611
+9V 5
VIDEO IN 3
GND 2
AUDIO IN 1

P55
1 VIDEO OUT (N.L.)
2 GND
4 GND
5 VIDEO IN (N.L.)

P53
1 GND
2 RF OUT
3 PG (30Hz) IN
4 +12V
5 EXCEPT REC +12V
6 GND
8 LP HIGH IN
9 +12V
10 30Hz PULSE OUT

P54
1 EMPHASIZED V. IN
3 GND

FM MODULATOR RECORD AND HEAD AMP BOARD
VJB 0532

P51
V. HEAD A (X) 1
V. HEAD A (Y) 3
GND 5
GND 6
V. HEAD B (Y) 8
V. HEAD B (X) 10
H6301 VIDEO HEAD
H6302 VIDEO HEAD

P52
1 GND
2 CHROMA (630K) IN
3 ACK IN
4 DELAYED REC +12V
5 REC +12V

CHROMA BOARD
VJB 0841
J1
J2
J3
J4

DEMODULATOR BOARD
VJB 0705
UHF IN OUT 300 ohm
VHF IN OUT 75 ohm
P703
+12V 1
VIDEO OUT 2
GND 3
AUDIO OUT 5

PRODUCT SAFETY NOTE
SHADED COMPONENTS HAVE SPECIAL CHARACTERISTICS IMPORTANT TO SAFETY. BEFORE REPLACING ANY OF THESE COMPONENTS READ CAREFULLY THE PRODUCT SAFETY NOTICE IN THIS SERVICE DATA. DO NOT DEGRADE THE SAFETY OF THE SET THROUGH IMPROPER SERVICING.

NOTES
RESISTOR VALUES ARE IN OHMS, K=1000 OHMS
CAPACITOR VALUES ARE IN μF UNLESS OTHERWISE SPECIFIED.

ALL VOLTAGES SHOWN ON SCHEMATIC ARE MEASURED WITH AC INPUT OF 120 VAC.

ALL VOLTAGES SHOULD HOLD WITHIN 20%.

WAVEFORMS ARE TAKEN USING THE TEST TAPE IN PLAYBACK AND A VIDEO GENERATOR IN RECORD.

TIMER BOARD
VJB 0660
P609
TIMER SW 1 (21)
AC 16V 2 (22)
GND 3 (23)
TIMER ON 4 (24)
AC 3V 5 (25)

POWER SUPPLY BOARD
VJB 0155
120V AC
F101
L101
R101
C101
POWER SWITCH S6302
F104 100mA
UNREG +18V 10 (26)
UNREG +18V 9 (27)
GND 8 (28)
STOPPAGE 6 (29)
UNREG +12V 5 (30)
GND 4
GND 3 (23)
AC 16V 2 (22)
AC 3V 1 (25)
T6302 POWER TRANSFORMER
120V RED
BLACK 0V
BROWN 16V
YELLOW
ORANGE 3V
T6301 POWER TRANSFORMER
120V RED
BROWN 100V
16V YELLOW
12.5V BLACK
THERMAL FUSE 0V BLACK

TR 6301 REGULATOR

REGULATOR AND TRANSPORT BOARD
VJB 0662

P61
1 P TR C
2 P TR E
3 P TR E
4 P TR B
5 GND

P62
TIMER ON 1 (24)
TIMER SW ON 2 (21)
POWER OFF 3
UNREG +12V 4
UNREG +12V 5 (30)
GND 6
GND 7 (27)
POWER ON 8 (29)
UNREG +18V 9 (26)
+12V 10

P63
DEW SENSOR 1
DEW LAMP 2
STOP SOL 4
UNREG +18V 5
LOADING M+ 6
LOADING M− 7
+12V 9
SUPPLY PHOTO 10

P64
UNLOADING (L) 10
TAPE SLACK 9
GND 8
PINCH SOL 7
LAMP OUT 6 (32)
PAUSE REMOCON 5
TAKE UP PHOTO TR 4
MEMORY COUNTER 3
LOADING END 12V 2
REEL STOP PHOTO 1

P65
LOADING END +12V 10 (1)
+12V 9 (2)
UNREG +12V (3)
PAUSE (L) 7 (4)
GND 6 (5)
FWD +12V 5 (6)
FF REW +12V 4
CAP M-ON 3 (8)
TRACKING SHIFTER 2 (9)
CYL LOCK 1 (10)

P608
D6301
D6302
GND 3
DEW 2
POWER 1 (28)
LIGHT EMITTING DIODES P.W.B. (VJB00236)

TR 6302
D6305
SUPPLY PHOTO TR CONNECTION P.W.B (VJB00233)

M6302 LOADING MOTOR

P607
C6303 0.033
C6304 0.033
3 DEW
2 M−
1 M+
LOADING MOTOR CONNECTION P.W.B (VJB 00238)

DEW SENSOR

P. SOLENOID SL 6302
SL 6301 STOP SOLENOID

S6304
S6305
P606
UN LOAD 3
LOAD 2
LOAD 1
UNLOADING FINISH SW
LOADING FINISH SW

PLAY SWITCH NO. 2
S6306
MICRO SWITCH CON P.W.B (VJB00226)

P. W. B—PRINTED WIRING BOARD
V. HEAD—VIDEO HEAD
P. G.—PULSE GENERATOR
LP—LONG PLAY (4 HOUR MODE)
SP—STANDARD PLAY (2 HOUR MODE)
ACK—AUTOMATIC COLOR KILLER
NL—NON-LINEAR
V SYNC—VERTICAL SYNC
E-E—ELECTRIC TO ELECTRIC
V-V—VIDEO HEAD TO VIDEO HEAD
FG—FREQUENCY GENERATOR
CTL—CONTROL
AE—AUDIO ERASE
FE—FULL ERASE
CAP M—CAPSTAN MOTOR
CYL LOCK—CYLINDER LOCK
DL—DELAYED
REMOCON—REMOTE CONTROL
P. TR—POWER TRANSISTOR
P. SOLENOID—PRESSURE ROLLER SOLENOID
P1, P2, P3—POSITION COILS (CYLINDER MOTOR)
M1, M2, M3—MAIN COILS (CYLINDER MOTOR)

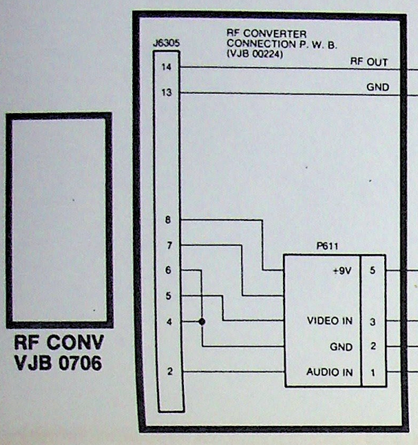

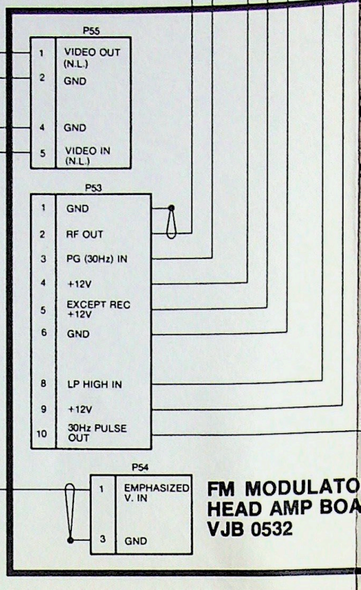

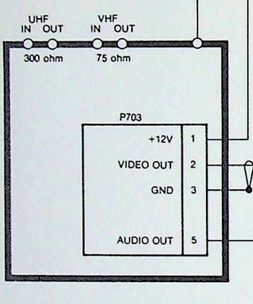

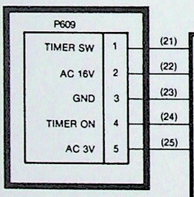

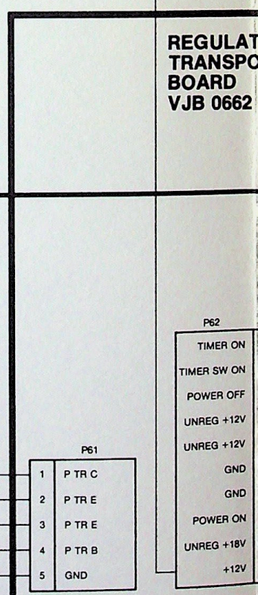

PRODUCT SAFETY NOTE
SHADED COMPONENTS HAVE SPECIAL CHARACTERISTICS IMPORTANT TO SAFETY. BEFORE REPLACING ANY OF THESE COMPONENTS READ CAREFULLY THE PRODUCT SAFETY NOTICE IN THIS SERVICE DATA. DO NOT DEGRADE THE SAFETY OF THE SET THROUGH IMPROPER SERVICING.

NOTES
RESISTOR VALUES ARE IN OHMS, K=1000 OHMS
CAPACITOR VALUES ARE IN μF UNLESS OTHERWISE SPECIFIED.

ALL VOLTAGES SHOWN ON SCHEMATIC ARE MEASURED WITH AC INPUT OF 120 VAC.

ALL VOLTAGES SHOULD HOLD WITHIN 20%.

WAVEFORMS ARE TAKEN USING THE TEST TAPE IN PLAYBACK AND A VIDEO GENERATOR IN RECORD.

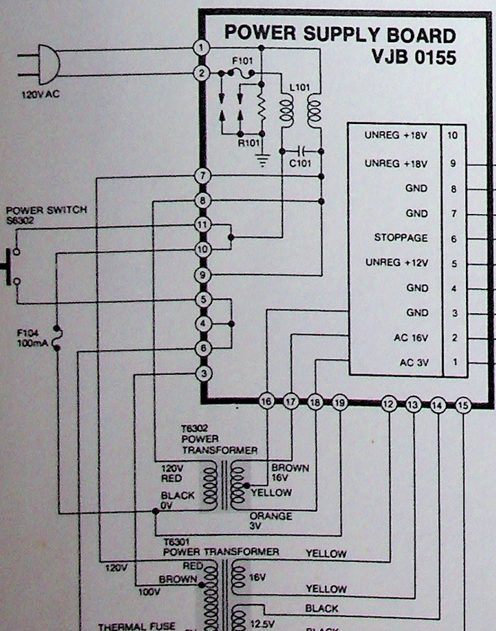

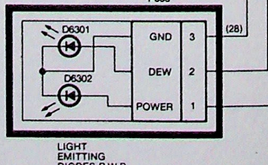

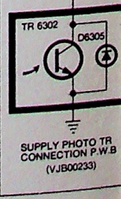

INTERCONNECTING WIRING DIAGRAM

A/C HEAD CONNECTION P. W. B. (VJB 00230)

P612: 1 GND, 5 AE HEAD, 6 GND, 7 SENSOR LAMP, 9 GND, 10 CTL HEAD

(31) (32) (33)

H6303-A AUDIO HEAD — TP 6301 — R6301 10 — TP 6302

H6303-B A.E HEAD

H6303-C CTL HEAD

AUDIO/CONTROL HEAD P. W. B. (VJB 00245)

PL 6301

LAMP CONNECTION P. W. B. (VJB 00230)

REEL SENSOR SECTION P. W. B. (VJB 00225)

P51: V. HEAD A (X) 1, V. HEAD A (Y) 3, GND 5, GND 6, V. HEAD B (Y) 8, V. HEAD B (X) 10

H6301 VIDEO HEAD — H6302 VIDEO HEAD

P52: 1 GND, 2 CHROMA (630K) IN, 3 ACK IN, 4 DELAYED REC +12V, 5 REC +12V

R RECORD AND ARD

CHROMA BOARD VJB 0841

J1, J2, J3, J4

P36: 1 EMPHASIZED V. OUT, 3 GND

P35: 1 GND, 2 REC CHROMA (630KHz) OUT, 3 ACK OUT, 4 DELAYED REC +12V, 5 REC +12V

P33: (11) 1 EXCEPT REC +12V, (12) 2 V SYNC OUT, (13) 3 REF 60Hz OUT, (14) 4 PG (30Hz) IN, (15) 5 PAUSE MUTING, (16) 6 GND, (17) 7 DELAYED REC +12V, (18) 8 REC +12V, 9 REC +12V, (20) 10 E-E, V-V SEL

P37: 1 VIDEO IN (N.L.), 2 GND, 4 GND, 5 VIDEO OUT (N.L.)

P32: 1 VIDEO IN, 2 GND, (37) 3 LP HIGH IN

P34: 1 GND, 2 RF IN, 3 PG (30Hz) OUT, 4 +12V, 5 EXCEPT REC +12V, 6 GND, 8 LP HIGH OUT, 9 +12V, 10 30Hz PULSE IN

P31: 1 VIDEO OUT TO RF CONV., 2 GND, 3 +12V, 6 VIDEO OUT (75 ohm), 7 GND, 8 +12V, 9 +9V TO RF CONV., 10

LUMINANCE BOARD VJB 0365

P38: (38) 1 VIDEO OUT (N.L), (39) 3 EXCEPT REC +12V, (40) 5 VIDEO IN (N.L.)

P64: UNLOADING (L) 10, TAPE SLACK 9, GND 8, PINCH SOL 7, LAMP OUT 6, PAUSE REMOCON 5, TAKE UP PHOTO TR 4, MEMORY COUNTER 3, LOADING END 12V 2, REEL STOP PHOTO 1

P65: LOADING END +12V 10, +12V 9, UNREG +12V, PAUSE (L) 7, GND 6, FWD +12V 5, FF REW +12V 4, CAP M-ON 3, TRACKING SHIFTER 2, CYL LOCK 1

P63: DEW SENSOR 1, DEW LAMP 2, STOP SOL 4, UNREG +18V 5, LOADING M+ 6, LOADING M− 7, +12V 9, SUPPLY PHOTO 10

P21: (11) 1 EXCEPT REC +12V, (12) 3 V. SYNC, (13) 4 REF OSC, (14) 5 PG (30Hz) OUT, (15) 6 PAUSE MUTING, (16) 7 GND, (17) 8 DELAYED REC +12V, (18) 9 REC +12V, (20) 10 E-E., V-V SEL

P22: (1) 1 LOADING END, (2) 2 +12V, (3) 3 UNREG +12V, (4) 4 PAUSE (L), (5) 5 GND, (6) 6 FWD +12V, (8) 8 CAP. M. ON, (9) 9 TRACKING SHIFTER, (10) 10 CYL. LOCK

P29: (44) 1 MUTING, (45) 2 MUTING, (46) 3 P.B.CTL AMP OUT

P23: (33) 1 GND, 2 C.T.L. HEAD, 3 +12V, (48) 4 . TRACKING, 5

P24: 1 E-E, V-V SEL, 2 DELAYED FWD +12V, 4 GND, 5 OSC IN, (31) 6 GND, 7 A.E HEAD, 8 GND, 9 F.E HEAD, 10 F.E HEAD

SERVO BOARD VJB 0280

P28: (41) 1 LP. C. FREERUN, (42) 2 FG IN, (43) 3 FG OUT

P25: (47) CAPSTAN PG 5, (35) CAPSTAN FG 4, (36) CAPSTAN MOTOR 3, POWER ON 2, POWER OFF 1

D-D CYLIND DRIVE BOARD VJB 0281

P. SOLENOID SL 6302

P607: 3 DEW, 2 M−, 1 M+ — C6303 0.033, C6304 0.033

M6302 LOADING MOTOR — LOADING MOTOR CONNECTION P.W.B (VJB 00238)

DEW SENSOR

SL 6301 STOP SOLENOID

P606: S6304, S6305 — UN LOAD 3, LOAD 2, LOAD 1

UNLOADING FINISH SW — LOADING FINISH SW

P613: PLAY SWITCH NO. 2 — S6306 — LEAF SW 3, UN LOAD 2, TAPE 1

MICRO SWITCH CONNECTION P.W.B (VJB00226)

TR6303 — D6304

TAKE UP PHOTO TR CONNECTION P.W.B (VJB00234)

MEMORY COUNTER SWITCH S6307 — MEMORY SWITCH S6308

H6304 FULL ERASE HEAD — H6308 FG HEAD

MEMORY SWITCH CONNECTION P. W. B. (VJB 00228)

CAP. MOTOR P.W.B. (VJB 00237)

P605: 1, CAP FG 3, M+ 4, M− 5 — (35) (36) — C6301 0.033, C6302 0.033

M6301 CAPSTAN MOTOR

INTERCONNECTING WIRING DIAGRAM

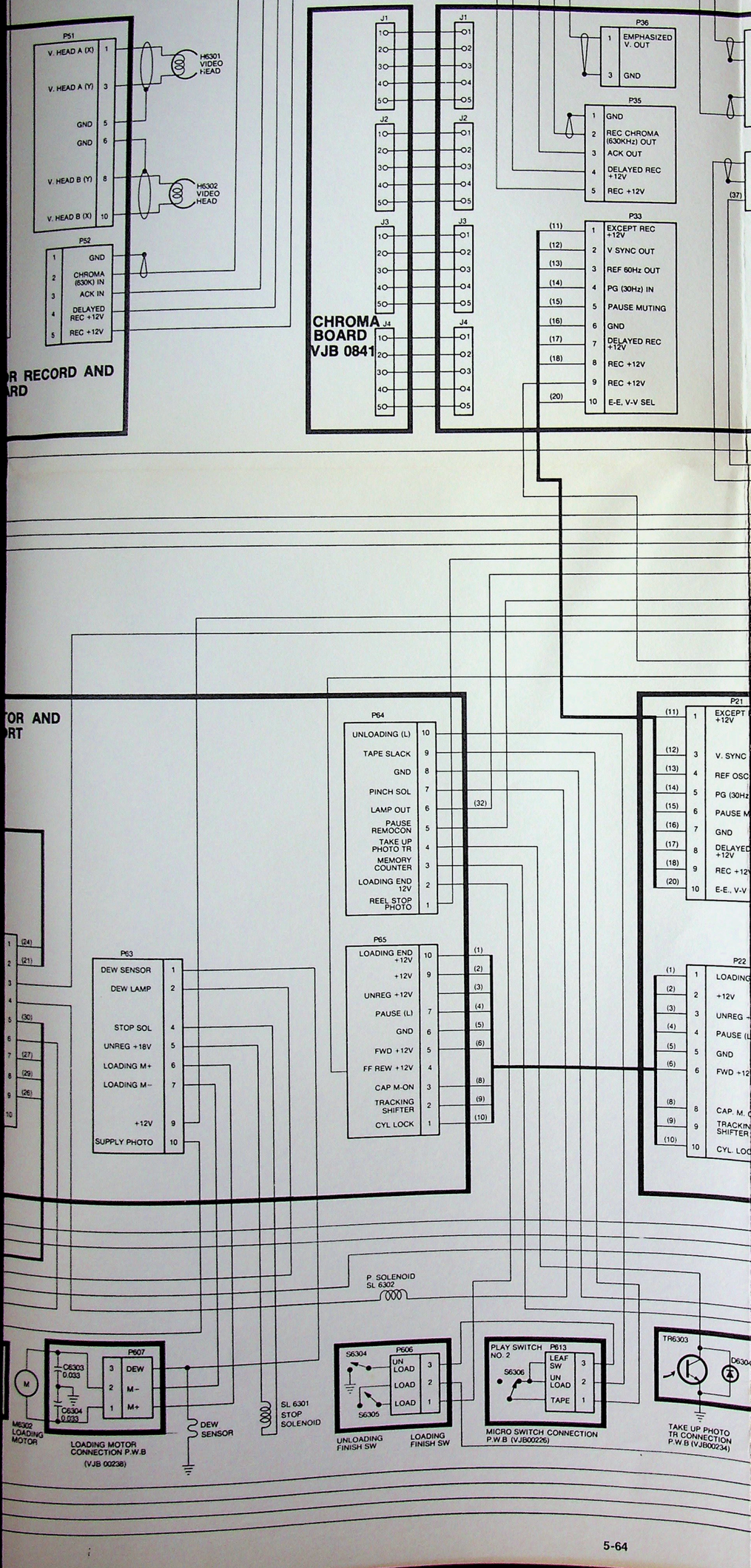

A/C HEAD CONNECTION
P. W. B. (VJB 00239)

P612
1
5 AE HEAD
6 GND
7 SENSOR LAMP
9 GND
10 CTL HEAD
(31)
(32)
(33)

H6303-A AUDIO HEAD
TP 6301
R6301 10
TP 6302
H6303-B A.E HEAD
H6303-C CTL HEAD

AUDIO/CONTROL HEAD
P. W. B. (VJB 00245)

PL 6301

LAMP CONNECTION
P. W. B. (VJB 00230)

AUDIO BOARD VJB 043

P37
1 VIDEO IN (N.L.)
2 GND
4 GND
5 VIDEO OUT (N.L.)

P32
1 VIDEO IN
2 GND
3 LP HIGH IN

P34
1 GND
2 RF IN
3 PG (30Hz) OUT
4 +12V
5 EXCEPT REC +12V
6 GND
8 LP HIGH OUT
9 +12V
10 30Hz PULSE IN

P31
1 VIDEO OUT TO RF CONV.
2 GND
3 +12V
6 VIDEO OUT (75 ohm)
7 GND
8 +12V
9 +9V TO RF CONV.
10

P38
(38) 1 VIDEO OUT (N.L.)
(39) 3 EXCEPT REC +12V
(40) 5 VIDEO IN (N.L.)

LUMINANCE BOARD
VJB 0365

REEL SENSOR SECTION
P. W. B. (VJB 00225)

PHOTO TR OUT
P614
3
2 GND
1 +12V
R6305 1/2 W 560 ohm
R6306 6800

P23
1 GND
2 C.T.L. HEAD
3 +12V
4 TRACKING
5
(33)
(48)

P28
(41) 1 LP. C. FREERUN
(42) 2 FG IN
(43) 3 FG OUT

P25
(47) CAPSTAN PG 5
(35) CAPSTAN FG 4
(36) CAPSTAN MOTOR 3
POWER ON 2
POWER OFF 1

P29
(44) 1 MUTING
(45) 2 MUTING
(46) 3 P.B.CTL AMP OUT

P24
1 E-E, V-V SEL
2 DELAYED FWD +12V
4 GND
5 OSC IN
6 GND
(31) 7 A.E HEAD
8 GND
9 F.E HEAD
10 F.E HEAD

SERVO BOARD
VJB 0280

J2
J1

D-D CYLINDER MOTOR DRIVE BOARD VJB 0281

P26
GND 10
FG 9
P3 7
P2 6
5
P COM 4
OSC 2
VCC 1

P27
M COM 5
M3 4
M2 3
M1 2
PG 1

MIC JACK CONNECTION P. W. B. (VJB 00227)

P602
1 GND
2 AUDIO IN
3 GND
4 AUDIO OUT
5 GND
R6303 100K

CAP. MOTOR P.W.B. (VJB 00237)

P605
1
CAP FG 3
M+ 4
M- 5
(35)
(36)

C6301 0.033
C6302 0.033
M
M6301 CAPSTAN MOTOR

H6308 FG HEAD
H6304 FULL ERASE HEAD

MEMORY COUNTER SWITCH S6307
MEMORY SWITCH S6308
MEMORY SWITCH CONNECTION P. W. B. (VJB 00226)

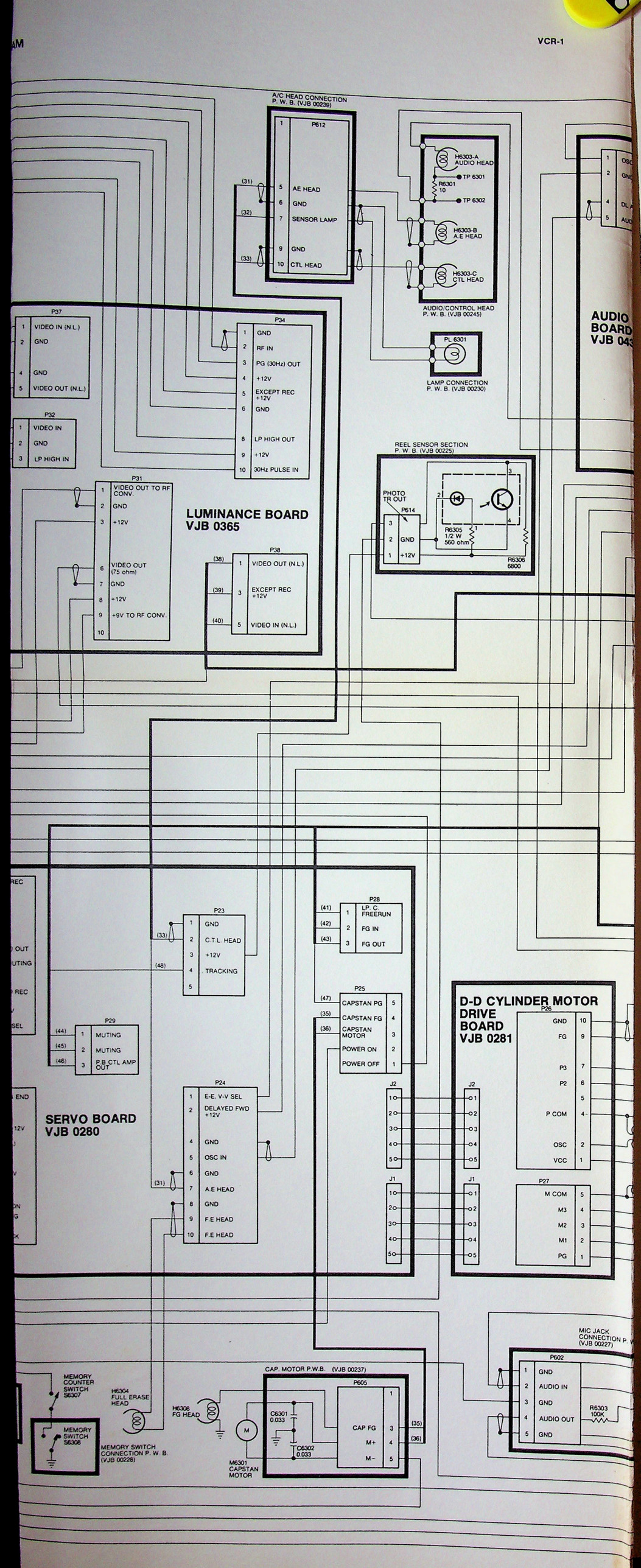
A/C HEAD CONNECTION P. W. B. (VJB 00239)
P612
AE HEAD
GND
SENSOR LAMP
GND
CTL HEAD
H6303-A AUDIO HEAD
TP 6301
R6301 10
TP 6302
H6303-B A.E HEAD
H6303-C CTL HEAD
AUDIO/CONTROL HEAD P. W. B. (VJB 00245)
PL 6301
LAMP CONNECTION P. W. B. (VJB 00230)
AUDIO BOARD VJB 043
P37
VIDEO IN (N.L.)
GND
GND
VIDEO OUT (N.L.)
P32
VIDEO IN
GND
LP HIGH IN
P34
GND
RF IN
PG (30Hz) OUT
+12V
EXCEPT REC +12V
GND
LP HIGH OUT
+12V
30Hz PULSE IN
P31
VIDEO OUT TO RF CONV.
GND
+12V
VIDEO OUT (75 ohm)
GND
+12V
+9V TO RF CONV.
LUMINANCE BOARD VJB 0365
P38
VIDEO OUT (N.L.)
EXCEPT REC +12V
VIDEO IN (N.L.)
REEL SENSOR SECTION P. W. B. (VJB 00225)
PHOTO TR OUT
P614
GND
+12V
R6305 1/2 W 560 ohm
R6306 6800
P23
GND
C.T.L. HEAD
+12V
TRACKING
P28
LP. C. FREERUN
FG IN
FG OUT
P25
CAPSTAN PG
CAPSTAN FG
CAPSTAN MOTOR
POWER ON
POWER OFF
D-D CYLINDER MOTOR DRIVE BOARD VJB 0281
P26
GND
FG
P3
P2
P.COM
OSC
VCC
P27
M.COM
M3
M2
M1
PG
P29
MUTING
MUTING
P.B.CTL AMP OUT
P24
E-E, V-V SEL
DELAYED FWD +12V
GND
OSC IN
GND
A.E HEAD
GND
F.E HEAD
F.E HEAD
SERVO BOARD VJB 0280
MIC JACK CONNECTION P. W. B. (VJB 00227)
P602
GND
AUDIO IN
GND
AUDIO OUT
GND
R6303 100K
CAP. MOTOR P.W.B. (VJB 00237)
P605
CAP FG
M+
M-
C6301 0.033
C6302 0.033
M6301 CAPSTAN MOTOR
H6304 FULL ERASE HEAD
H6308 FG HEAD
MEMORY COUNTER SWITCH S6307
MEMORY SWITCH S6308
MEMORY SWITCH CONNECTION P. W. B. (VJB 00226)

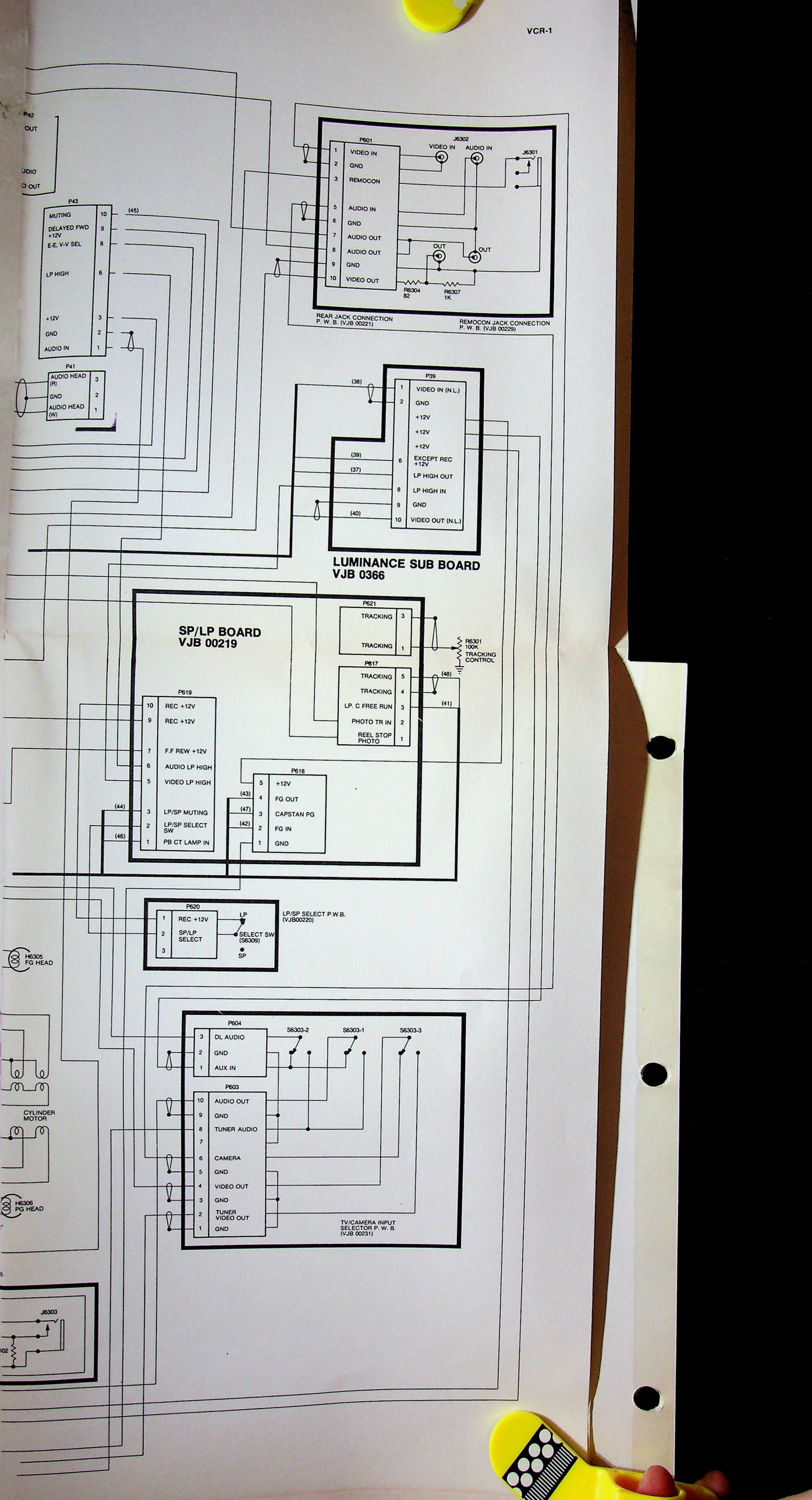
P601
1 VIDEO IN
2 GND
3 REMOCON
5 AUDIO IN
6 GND
7 AUDIO OUT
8 AUDIO OUT
9 GND
10 VIDEO OUT
J6302
VIDEO IN
AUDIO IN
J6301
OUT
OUT
R6304 82
R6307 1K
REAR JACK CONNECTION P. W. B. (VJB 00221)
REMOCON JACK CONNECTION P. W. B. (VJB 00229)
P43
MUTING 10
DELAYED FWD +12V 9
E-E, V-V SEL 8
LP HIGH 6
+12V 3
GND 2
AUDIO IN 1
(45)
P41
AUDIO HEAD (R) 3
GND 2
AUDIO HEAD (W) 1
P39
1 VIDEO IN (N.L.)
2 GND
+12V
+12V
+12V
6 EXCEPT REC +12V
LP HIGH OUT
8 LP HIGH IN
9 GND
10 VIDEO OUT (N.L.)
(38)
(39)
(37)
(40)
LUMINANCE SUB BOARD
VJB 0366
SP/LP BOARD
VJB 00219
P621
TRACKING 3
TRACKING 1
R6301 100K TRACKING CONTROL
P617
TRACKING 5
TRACKING 4
LP. C FREE RUN 3
PHOTO TR IN 2
REEL STOP PHOTO 1
(48)
(41)
P619
10 REC +12V
9 REC +12V
7 F.F REW +12V
6 AUDIO LP HIGH
5 VIDEO LP HIGH
3 LP/SP MUTING
2 LP/SP SELECT SW
1 PB CT LAMP IN
(44)
(46)
P618
5 +12V
4 FG OUT
3 CAPSTAN PG
2 FG IN
1 GND
(43)
(47)
(42)
P620
1 REC +12V
2 SP/LP SELECT
3
LP
SELECT SW (S6309)
SP
LP/SP SELECT P.W.B. (VJB00220)
H6305 FG HEAD
CYLINDER MOTOR
H6306 PG HEAD
P604
3 DL AUDIO
2 GND
1 AUX IN
S6303-2
S6303-1
S6303-3
P603
10 AUDIO OUT
9 GND
8 TUNER AUDIO
7
6 CAMERA
5 GND
4 VIDEO OUT
3 GND
2 TUNER VIDEO OUT
1 GND
TV/CAMERA INPUT SELECTOR P. W. B. (VJB 00231)
J6303

EXPLODED VIEW OF MECHANISM

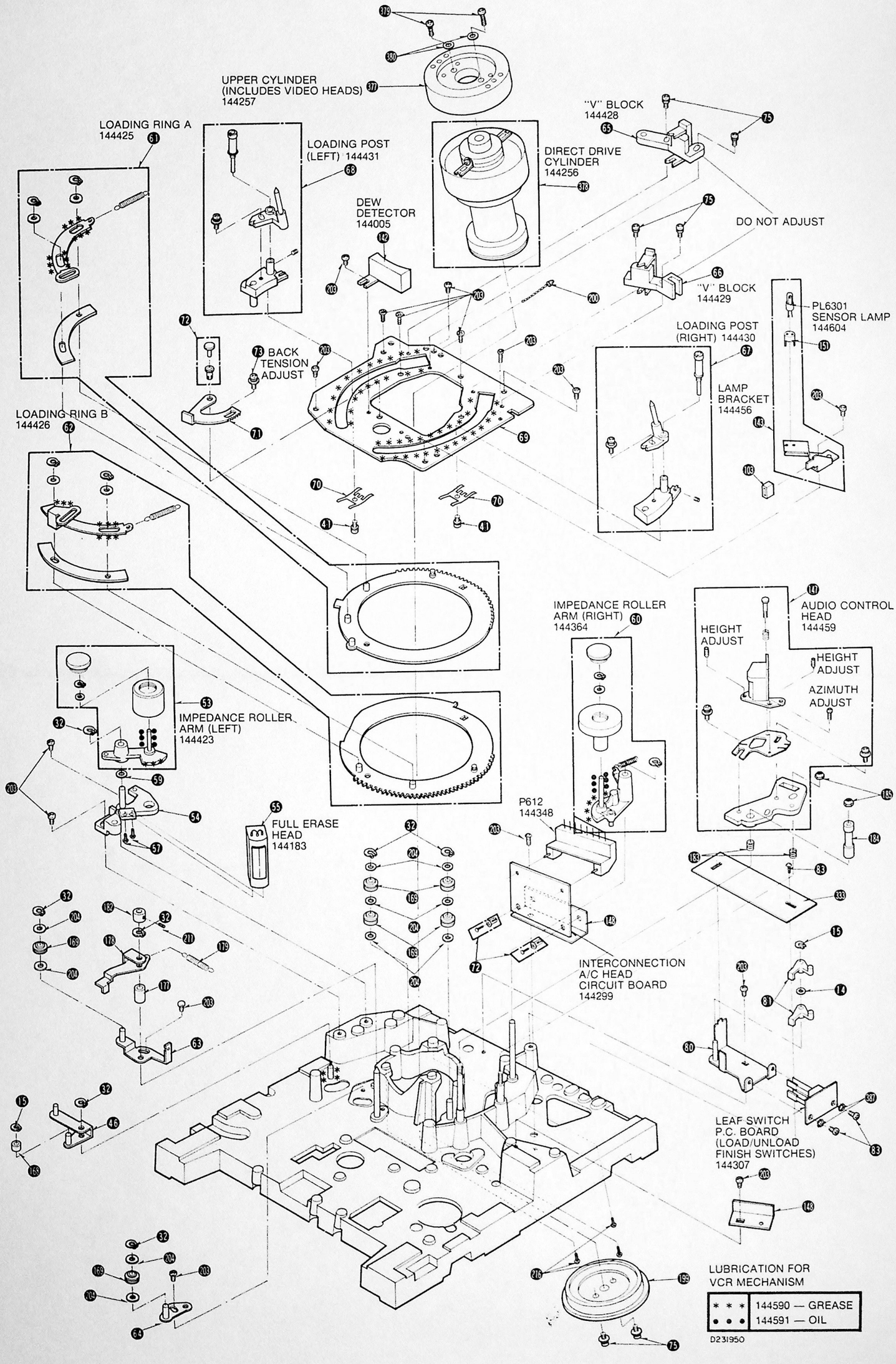

VCR-1

EXPLODED VIEW OF MECHANISM

REWIND ROLLER 144262

BRAKE ADJUST

CASSETTE OPENER 144433

TAKEUP PHOTO CELL 144306

PLAY IDLER 144265

PAUSE SLIDE LEVER 144454

F. FWD. IDLER 144263

PLAY PULLEY 144315

LUBRICATION FOR VCR MECHANISM

* * *	144590 — GREASE
• • •	144591 — OIL

D23I95I

F. FWD. SLIDE LEVER 144469

REWIND SLIDE LEVER 144467

F. FWD. LEVER 144472

PLAY SLIDE LEVER 144464

REWIND LEVER 144470

EJECT LEVER 144461

MAIN PULLEY 144248

REEL BELT A 144258

SAFETY LINK 144237

CONNECTING LINK 144471

VCR-1

EXPLODED VIEW OF MECHANISM

ROLLER
144594

TENSION
ARM
144417

THREADING
ARM
144595

TENSION
BAND
ADJUST

SUPPLY
REEL
TABLE
144219

TAKEUP
REEL
TABLE
144218

144302

WASHERS
HEIGHT ADJUST
144490
144491

144312
CIRCUIT
BOARD

CAPSTAN
MOTOR
144006

LUBRICATION FOR
VCR MECHANISM

* * *	144590 — GREASE
• • •	144591 — OIL

SUPPLY
PHOTO CELL
144311

CASSETTE
ARM A
144452

CASSETTE
ARM B
144453

D231952

VCR-1

EXPLODED VIEW OF MECHANISM

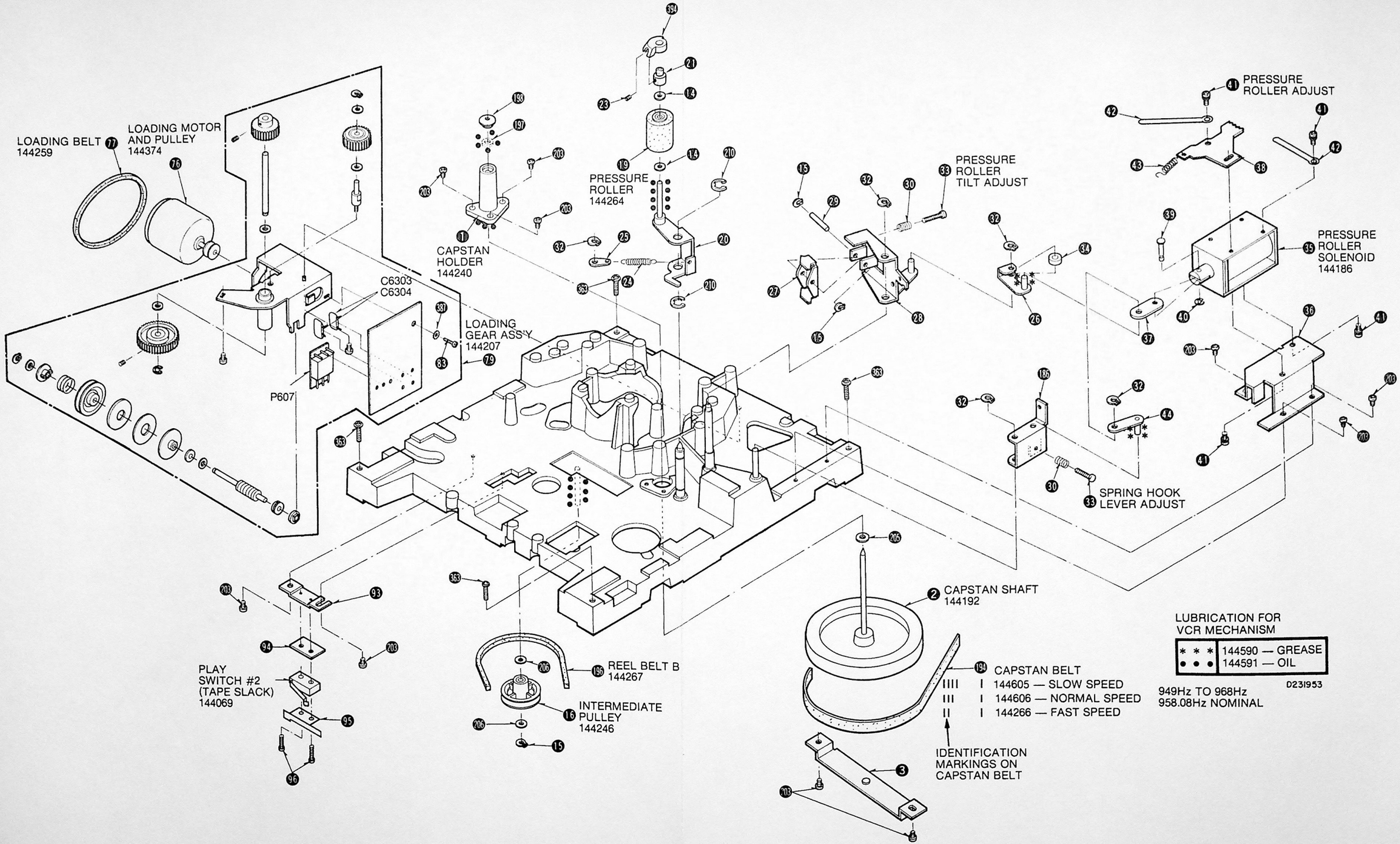

EXPLODED VIEW OF MECHANISM

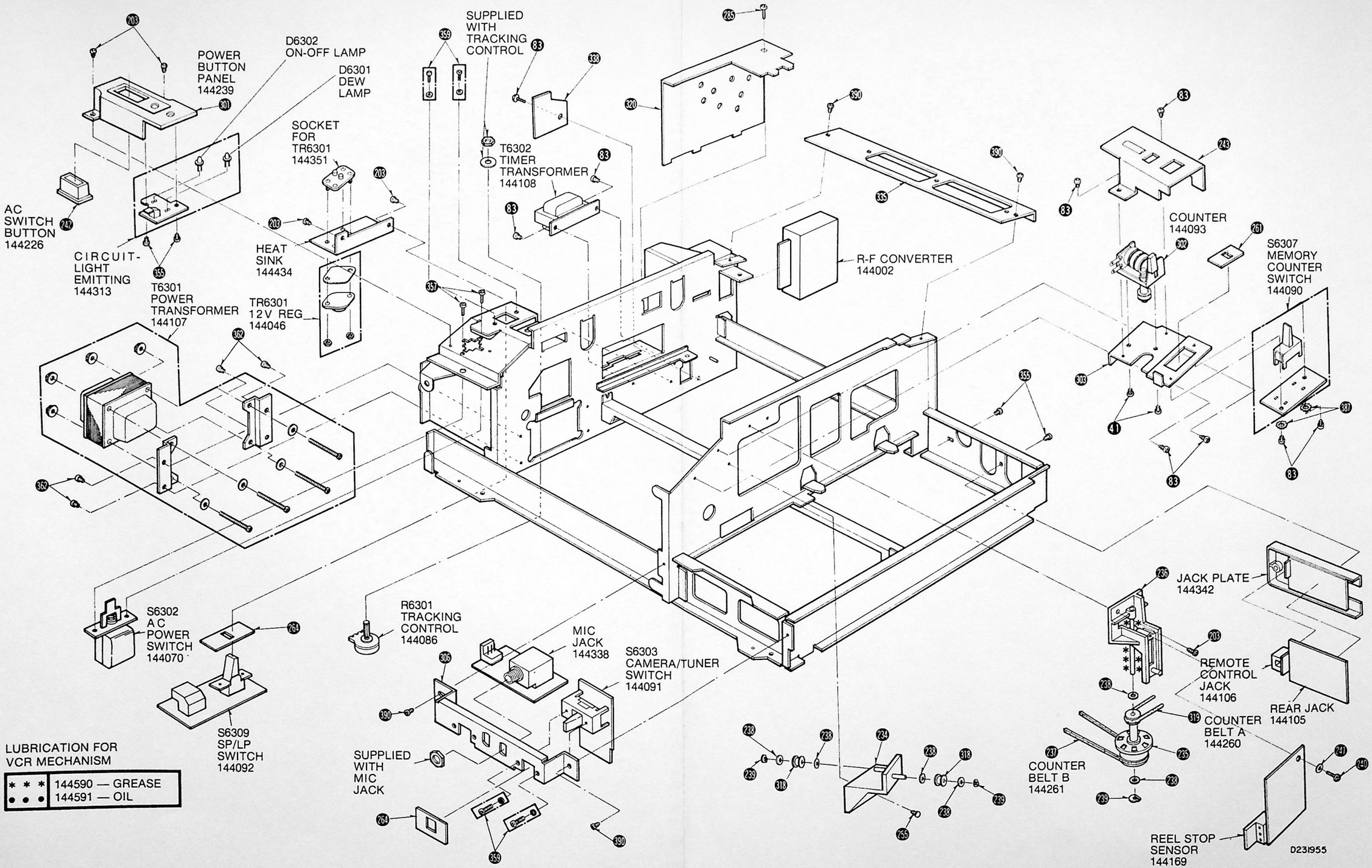

LUBRICATION FOR VCR MECHANISM

* * *	144590 — GREASE
• • •	144591 — OIL

VCR-1

EXPLODED VIEW OF MECHANISM

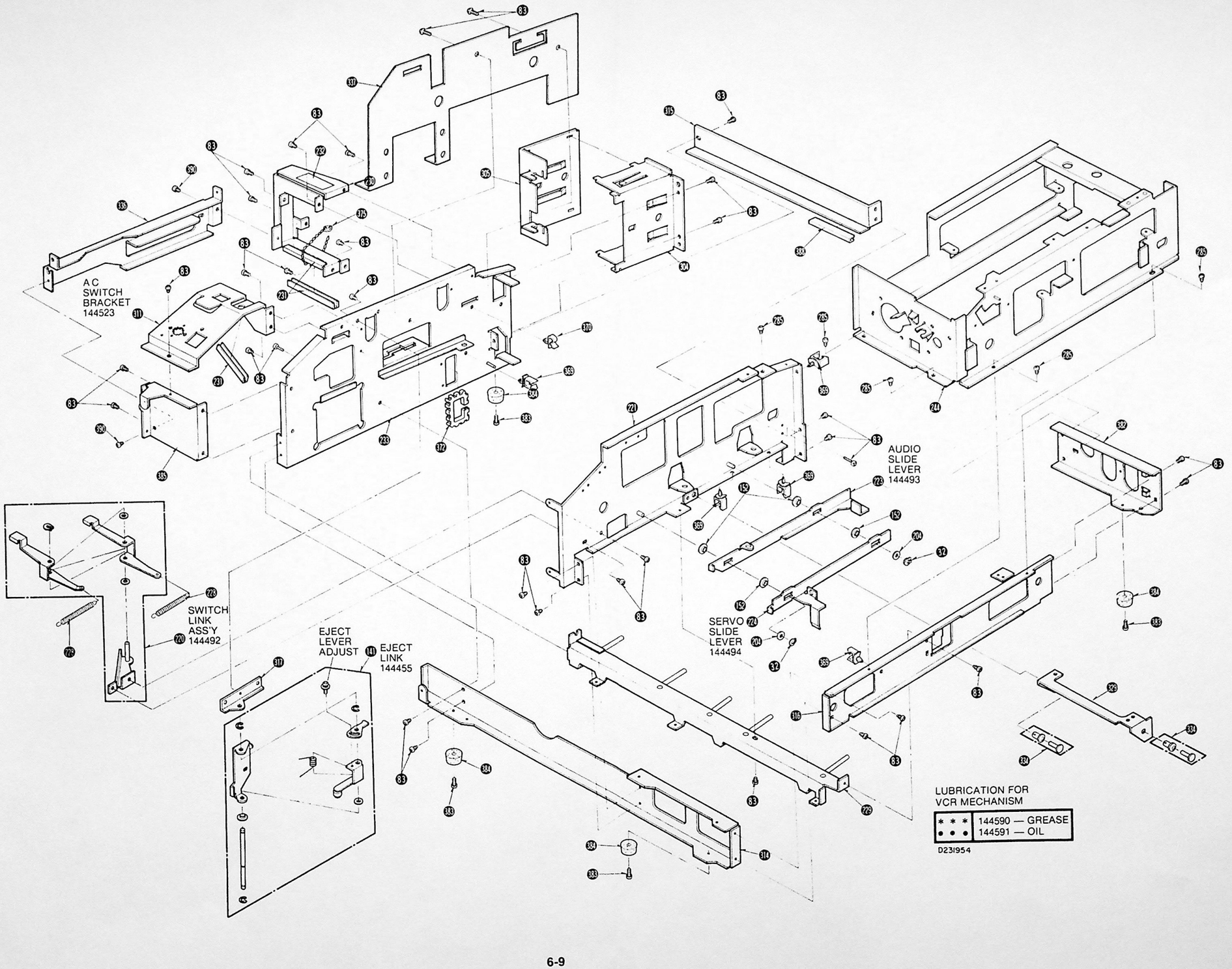

VCR-1

EXPLODED VIEW OF MECHANISM

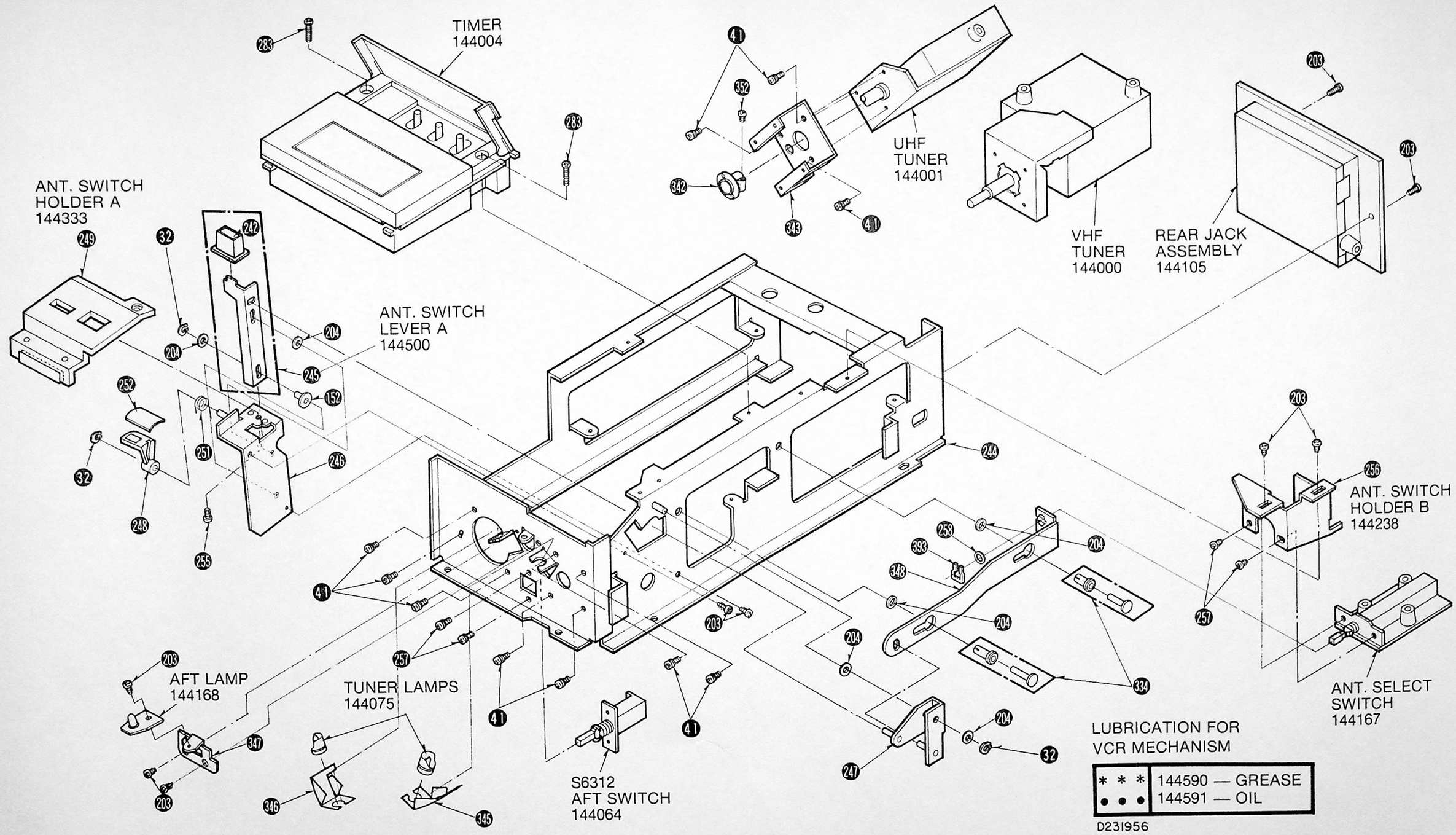

LUBRICATION FOR
VCR MECHANISM

* * *	144590 — GREASE
• • •	144591 — OIL

D231956

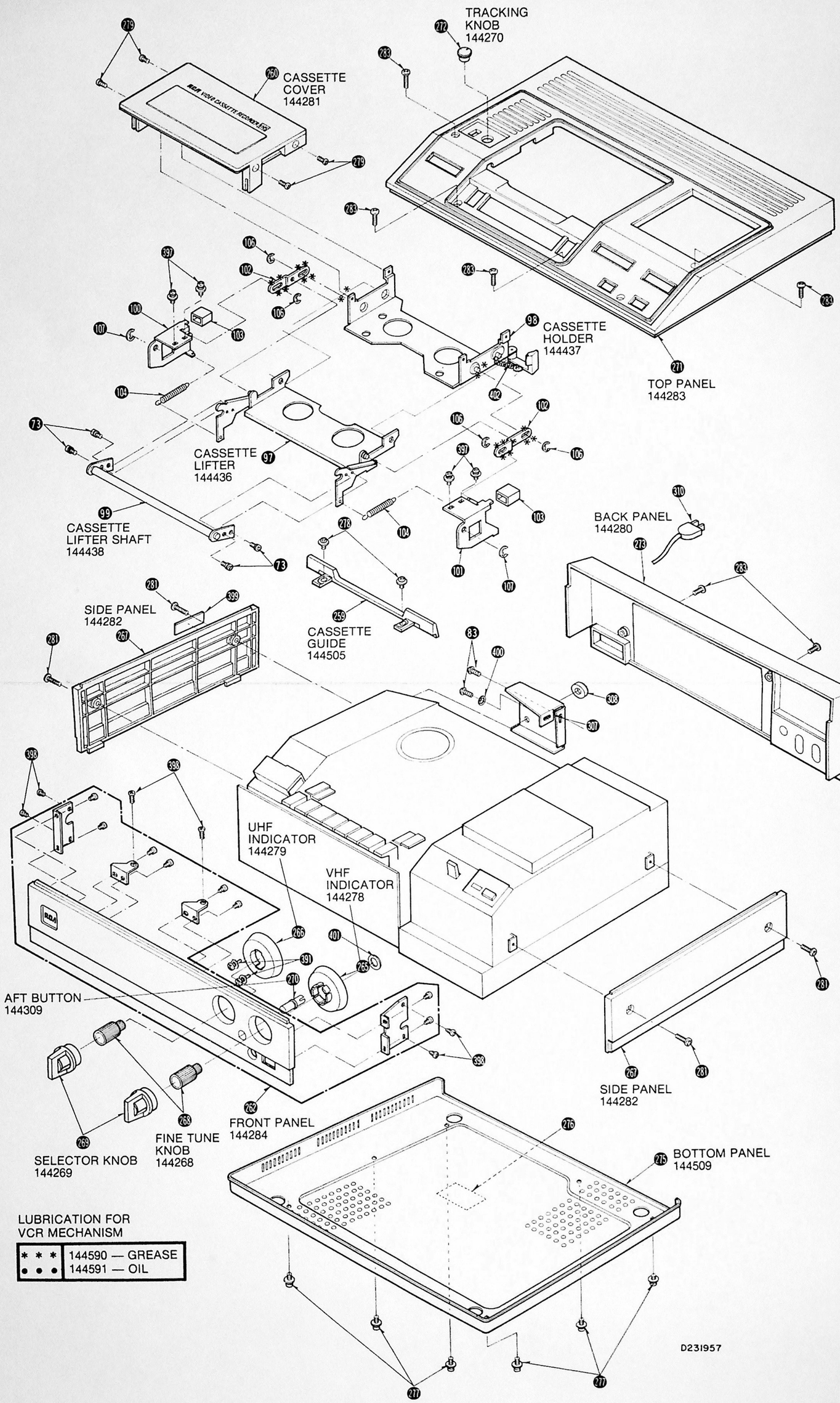

EXPLODED VIEW OF MECHANISM

EXPLODED VIEW OF MECHANISM

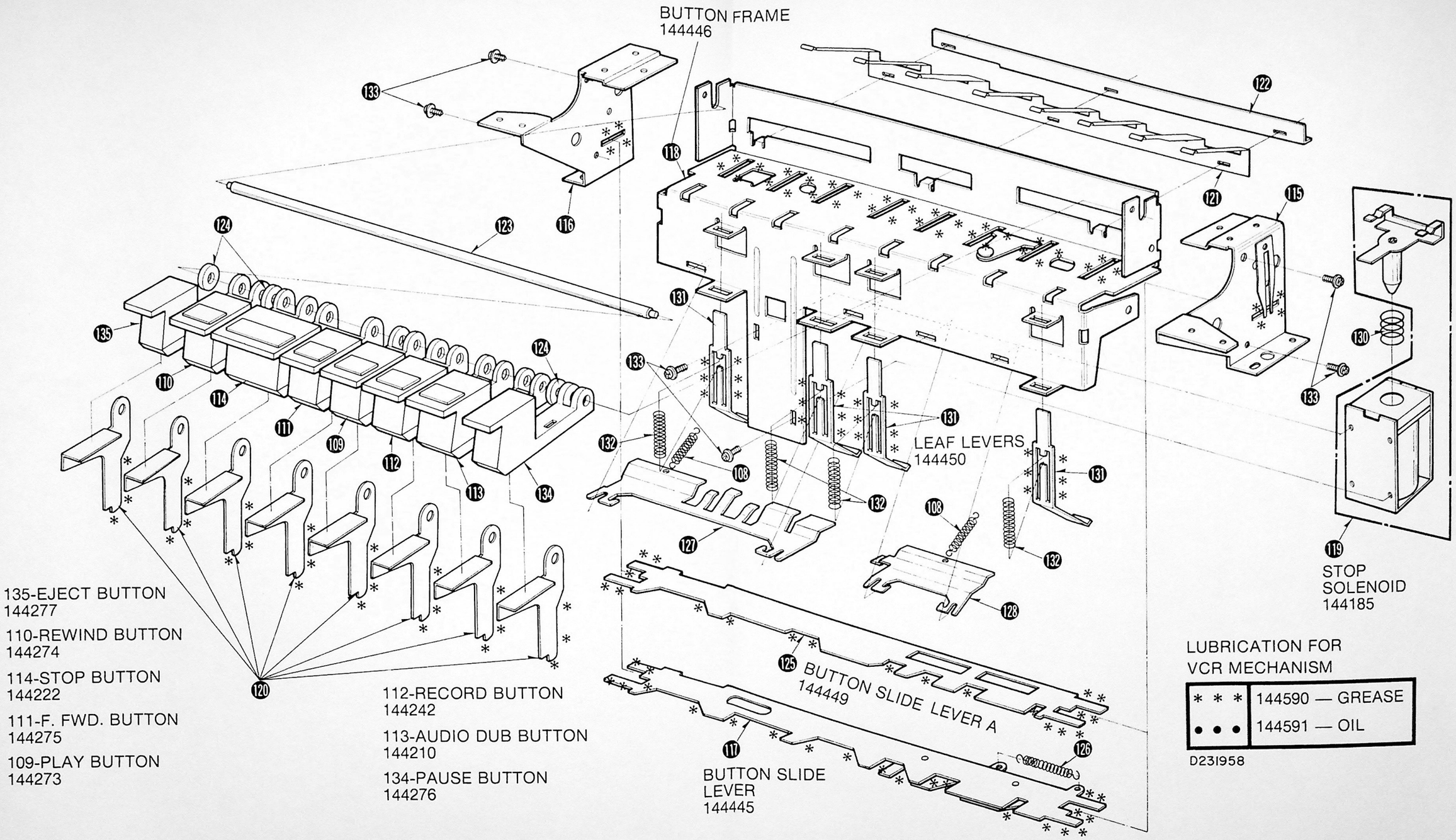

135-EJECT BUTTON
144277

110-REWIND BUTTON
144274

114-STOP BUTTON
144222

111-F. FWD. BUTTON
144275

109-PLAY BUTTON
144273

112-RECORD BUTTON
144242

113-AUDIO DUB BUTTON
144210

134-PAUSE BUTTON
144276

LUBRICATION FOR
VCR MECHANISM

* * *	144590 — GREASE
• • •	144591 — OIL

D231958

REPLACEMENT PARTS

WARRANTY STATUS OF ASSEMBLIES AND PARTS

- ● Complete assembly not eligible for warranty exchange or replacement
- † Eligible for warranty exchange for new or rebuilt unit
- ‡ Complete assembly eligible for warranty replacement with new or rebuilt unit

All other parts, except cabinet parts, are eligible for warranty replacement as discrete components. Cabinet parts must have prior approval of RCA for warranty replacement.

Warranty status of assemblies and parts is subject to change without notice.

PRODUCT SAFETY NOTE—Components marked with a (*) have special characteristics important to safety. Before replacing any of these components, read carefully the PRODUCT SAFETY NOTICE on page 2 of this Service Data. Don't degrade the safety of the set through improper servicing.

SYMBOL NO.	STOCK NO.	DRAWING NO.	DESCRIPTION
			TUNER ASSEMBLIES
			UHF TUNER
	144001		†Tuner — UHF complete
D1	144194		Diode
D2	144195		Diode
TR1	144327		Transistor — oscillator
	144236		Cover
	144247		Ball — steel
	144230		Bracket
	144271		Gear — double
	144229		Gear — idler
	144253		Pin — stop
	144251		Screw — 3 x 6 mm.
	144227		Shaft — assembly fine tuning
	144228		Shaft — main tuning
	144245		Spring — cover
	144249		Spring — detent
	144254		Stop
	144255		Stop
	144298		Washer
	144250		Washer — detent
			VHF TUNER
	144000		†Tuner — VHF complete
D1	144328		Diode
TR1	144325		Transistor — RF amp
TR2	144326		Transistor — mixer
TR3	144327		Transistor — oscillator
L7	144331		Transformer — IF output
	144352		Bracket
	144379		Core — tuning
	144354		Cover — bottom
	144369		Cover — sub
	144383		Filter — antenna
	144332		Gear — drive
	144370		Retainer — drum
	144353		Screw — 3 x 6 mm.
	144007		Shaft — & rotor assembly
	144355		Slider — assembly
	144371		Spring — ground
	144367		Spring — slider
	144372		Washer
			CIRCUIT BOARDS
	144168		Circuit — AFT lamp
	144167		Circuit — antenna selector
	144165		Circuit — audio
	144296		Circuit — camera input selector
	144312		Circuit — capstan motor
	144042		Circuit — chrominance
	144095		Circuit — D. D. cylinder motor drive
	144174		Circuit — timer fuse
	144081		Circuit — FM modulator record and head amp
	144299		Circuit — interconnection a/c head
	144307		Circuit — leaf switch, S6304, S6305
	144313		Circuit — light emiting diode, AC power-Dew
	144310		Circuit — loading motor
	144135		Circuit — SP/LP select
	144166		Circuit — SP/LP select sub
	144032		Circuit — luminance
	144300		Circuit — memory switch
	144291		Circuit — microphone jack
	144136		Circuit — power supply
	144105		Circuit — rear jack connection
	144169		Circuit — reel sensor
	144106		Circuit — remote control jack
	144094		Circuit — servo
	144082		Circuit — luminance sub process
	144311		Circuit — supply photo transistor
	144306		Circuit — take-up photo transistor
	144134		Circuit — regulator and transport
	144150		Circuit — TV demodulator
			RF CONVERTER
	144002		†Circuit — RF converter
			CHASSIS ASSEMBLY
			CAPACITORS
C101	136675		.047 uf 10% 600V film
C102	127801		.01 uf GMV 50V Z5U disc
C103	127801		.01 uf GMV 50V Z5U disc
C104	127801		.01 uf GMV 50V Z5U disc
C105	127801		.01 uf GMV 50V Z5U disc
C106	144994		4700 uf 25V electrolytic
C107	127801		.01 uf GMV 50V Z5U disc
C108	127801		.01 uf GMV 50V Z5U disc
C109	127801		.01 uf GMV 50V Z5u disc
C110	127801		.01 uf GMV 50V Z5u disc
C111	144994		4700 uf 25V electrolytic
C201	144560		.33 uf 50V electrolytic
C202	144560		.33 uf 50V electrolytic
C203	144561		820 pf 10% 50V Z5P disc
C204	144561		820 pf 10% 50V Z5P disc
C205	144562		.015 uf 10% 50V film
C206	139443		.082 uf 10% 50V film
C207	135359		.0056 uf 10% 50V film
C208	144560		.33 uf 50V electrolytic
C209	144563		47 uf 16V electrolytic
C210	133398		.056 uf 10% 50V film
C211	126821		.0039 uf 10% 50V film
C212	144563		47 uf 16V electrolytic
C213	132443		.047 uf 10% 50V film
C214	144561		820 pf 10% 50V Z5P disc
C215	144561		820 pf 10% 50V Z5P disc
C216	144563		47 uf 16V electrolytic
C217	133398		.056 uf 10% 50V film
C218	144576		.68 uf 50V electrolytic
C219	127801		.01 uf GMV 50V Z5U disc
C220	134778		.033 uf 10% 50V film 8s
C221	144563		47 uf 16V electrolytic
C222	165570		10 uf 16V electrolytic
C223	134778		.033 uf 10% 50V film
C224	165570		10 uf 16V electrolytic
C225	144561		820 pf 10% 50V Z5P disc
C226	144560		.33 uf 50V electrolytic
C227	144564		.1 uf 50V electrolytic
C228	139040		.0022 uf 10% 50V film
C229	139040		.0022 uf 10% 50V film
C230	144561		820 pf 10% 50V Z5P disc
C231	139040		.0022 uf 10% 50V film
C232	126795		.018 uf 10% 50V film
C233	144561		820 pf 10% 50V Z5P disc
C234	165570		10 uf 16V electrolytic
C235	133398		.056 uf 10% 50V film
C236	139445		.27 uf 10% 50V film
C237	141426		220 uf 16V electrolytic
C238	144561		820 pf 10% 50V Z5P disc
C239	144560		.33 uf 50V electrolytic
C240	105301		330 pf 10% 50V Z5P disc
C241	127801		.01 uf GMV 50V Z5U disc
C242	144565		100 uf 6V electrolytic
C243	165570		10 uf 16V electrolytic
C244	165570		10 uf 16V electrolytic
C245	135048		.022 uf 10% 50V film
C246	165570		10 uf 16V electrolytic
C247	138923		1 uf 50V electrolytic
C248	144563		47 uf 16V electrolytic (Early Production)
C248	133560		100 uf 10V electrolytic (Late Production)
C249	144566		33 uf 16V electrolytic
C250	165570		10 uf 16V electrolytic
C301	139284		220 uf 6V electrolytic (Early Production only)
C302	125705		27 pf 10% 50V NPO disc (Early Production only)
C303	104135		680 pf 10% 50V Z5P disc (Early Production Only)
C304	141298		4.7 uf 25V electrolytic
C305	144563		47 uf 16V electrolytic
C306	127801		.01 uf GMV 50V Z5U disc

REPLACEMENT PARTS

(continued)

PRODUCT SAFETY NOTE—Components marked with a (•) have special characteristics important to safety. Before replacing any of these components, read carefully the PRODUCT SAFETY NOTICE on page 2 of this Service Data. Don't degrade the safety of the set through improper servicing.

SYMBOL NO.	STOCK NO.	DRAWING NO.	DESCRIPTION
C307	144563		47 uf 16V electrolytic
C308	139284		220 uf 6V electrolytic
C309	144563		47 uf 6V electrolytic
C310	104135		680 pf 5% 50V N330 disc
C311	141298		4.7 uf 25V electrolytic
C312	144586		1 uf 50V N-P electrolytic
C313	144563		47 uf 16V electrolytic
C314	165570		10 uf 16V electrolytic
C315	127801		.01 uf GMV 50V Z5U disc
C316	165570		10 uf 16V electrolytic
C317	141298		4.7 uf 25V electrolytic
C318	127801		.01 uf GMV 50V Z5U disc
C319	165570		10 uf 16V electrolytic
C320	125705		27 pf 10% 50V NPO disc
C321	105300		100 pf 10% 50V NPO disc
C322	133560		100 uf 10V electrolytic
C323	102228		220 pf 10% 50V Z5P disc
C324	107323		270 pf 10% 50V Z5P disc
C325	144587		47 uf 6V N-P electrolytic
C326	144563		47 uf 16V electrolytic
C327	144567		82 pf 10% 50V NPO disc
C328	133560		100 uf 10V electrolytic
C329	125705		27 pf 10% 50V NPO disc
C330	144588		.15 uf 50V electrolytic
C331	127801		.01 uf GMV 50V Z5U disc
C332	127801		.01 uf GMV 50V Z5U disc
C333	105310		390 pf 10% 50V Z5P disc
C334	120832		1000 pf 10% 50V Z5P disc
C335	127801		.01 uf GMV 50V Z5U disc
C336	144564		.1 uf 50V electrolytic
C337	107323		270 pf 10% 50V Z5P disc
C338	127156		68 pf 10% 50V NPO disc
C339	138923		1 uf 50V electrolytic
C341	144563		47 uf 16V electrolytic
C342	127801		.01 uf GMV 50V Z5U disc
C343	127801		.01 uf GMV 50V Z5U disc
C344	127801		.01 uf GMV 50V Z5U disc
C345	127801		.01 uf GMV 50V Z5U disc
C346	105300		100 pf 10% 50V NPO disc
C347	127801		.01 uf GMV 50V Z5U disc
C348	105301		330 pf 10% 50V Z5P disc
C349	134778		.033 uf 10% 50V film
C350	127801		.01 uf GMV 50V Z5U disc
C351	127801		.01 uf GMV 50V Z5U disc
C352	127801		.01 uf GMV 50V Z5U disc
C353	144563		47 uf 16V electrolytic
C354	134778		.033 uf 10% 50V film
C355	127156		68 pf 10% 50V NPO disc
C356	127801		.01 uf GMV 50V Z5U disc
C357	127801		.01 uf GMV 50V Z5U disc
C358	127801		.01 uf GMV 50V Z5U disc
C359	127801		.01 uf GMV 50V Z5U disc
C360	127801		.01 uf GMV 50V Z5U disc
C361	134778		.033 uf 10% 50V film
C362	144563		47 uf 16V electrolytic
C363	104135		680 pf 5% 50V N330 disc
C364	107323		270 pf 10% 50V Z5P disc(Early Production)
C364	102230		470 pf 10% 50V Z5P disc (Late Production)
C365	109316		5 pf 10% 50V NPO disc (Early Production Only)
C366	105300		100 pf 10% 50V NPO disc (Early Production)
C366	144655		120 pf 10% 50V NPO disc (Late Production)
C367	135155		47 pf 5% 50V N750 disc
C368	105310		390 pf 10% 50V Z5P disc
C369	144568		33 pf 10% 50V NPO disc
C370	144563		47 uf 6V electrolytic
C374	144563		47 uf 16V electrolytic
C375	138923		1 uf 50V electrolytic
C376	165570		10 uf 16V electrolytic
C377	144563		47 uf 16V electrolytic
C378	144569		3.3 uf 16V N-P electrolytic
C379	144563		47 uf 6V electrolytic
C380	105300		100 pf 10% 50V NPO disc
C381	144564		.1 uf 50V electrolytic
C382	144563		47 uf 6V electrolytic
C383	141298		4.7 uf 25V electrolytic
C384	144584		4.7 uf 16V N-P electrolytic
C385	165570		10 uf 16V electrolytic
C386	120832		1000 pf 10% 50V Z5P disc
C388	102230		470 pf 10% 50V Z5P disc
C389	105300		100 pf 10% 50V NPO disc
C392	129357		1000 uf 10V electrolytic
C393	144561		820 pf 10% 50V Z5P disc (Early Production)
C393	120832		1000 pf 10% 50V Z5P disc (Late Production)
C394	127801		.01 uf GMV 50V Z5U disc
C395	144563		47 uf 16V electrolytic
C396	127801		.01 uf GMV 50V Z5U disc
C397	127801		.01 uf GMV 50V Z5U disc
C398	144568		33 pf 10% 50V NPO disc
C399	127801		.01 uf GMV 50V Z5U disc
C401	102230		470 pf 10% 50V Z5P disc (Early Production)
C401	112510		560 pf 10% 50V Z5P disc (Late Production)
C402	139055		33 uf 6V electrolytic
C403	165570		10 uf 16V electrolytic
C404	165570		10 uf 16V electrolytic
C405	134778		.033 uf 10% 50V film
C406	139441		.01 uf 10% 50V film
C407	165570		10 uf 16V electrolytic
C408	144570		.001 uf 10% 50V film
C409	144570		.001 uf 10% 50V film (Early Production Only)
C410	135359		.0056 uf 10% 50V film
C411	138923		1 uf 50V electrolytic
C412	165570		10 uf 16V electrolytic
C413	165570		10 uf 16V electrolytic
C415	144571		.0027 uf 10% 50V film
C416	165570		10 uf 16V electrolytic
C417	144565		100 uf 6V electrolytic
C418	165570		10 uf 16V electrolytic
C419	139441		.01 uf 10% 50V film
C420	165570		10 uf 16V electrolytic
C421	165570		10 uf 16V electrolytic
C422	169800		.22 uf 50V electrolytic
C423	165570		10 uf 16V electrolytic
C424	165570		10 uf 16V electrolytic
C425	105310		390 pf 10% 50V Z5P disc (Early Production Only)
C426	107323		270 pf 10% 500V Z5E disc (Early Production Only)
C427	141495		220 uf 16V electrolytic
C428	144563		47 uf 16V electrolytic
C429	144563		47 uf 16V electrolytic
C430	139441		.01 uf 10% 50V film (Early Production)
C430	139440		.0047 uf 10% 50V film (Late Production)
C431	139441		.01 uf 10% 50V film (Early Production Only)
C432	139441		.01 uf 10% 50V film (Early Production)
C432	139440		.0047 uf 10% 50V film (Late Production)
C433	139442		.039 uf 10% 50V film (Early Production Only)
C434	144572		.039 uf 10% 400V film (Early Production)
C434	137809		.0018 uf 10% 400V film (Late Production)
C435	144071		5 pf — 70 pf trimmer
C436	165570		10 uf 16v electrolytic
C437	139440		.0047 uf 10% 50V film
C438	132853		.18 uf 10% 50V film (Early Production)
C438	144659		.22 uf 10% 50V film (Late Production)
C439	139441		.01 uf 10% 50V film (Early Production Only)
C440	136342		.15 uf 10% 50V film
C441	139441		1000 pf 10% 50V disc (Late Production Only)
C442	144588		.15 uf electrolytic (Late Production Only)
C501	144573		47 pf 5% 50V N750 disc
C502	144573		47 pf 5% 50V N750 disc
C503	127801		.01 uf GMV 50V Z5U disc
C504	165570		10 uf 16V electrolytic
C506	165570		10 uf 16V electrolytic
C507	127801		.01 uf GMV 50V Z5U disc
C508	127801		.01 uf GMV 50V Z5U disc
C509	105301		330 pf 10% 50V Z5P disc
C510	127156		68 pf 10% 50V NPO disc
C511	127801		.01 uf GMV 50V Z5U disc
C512	134778		.033 uf 10% 50V film
C513	144570		.001 uf 10% 50V film
C514	144563		47 uf 16V electrolytic

REPLACEMENT PARTS

(continued)

PRODUCT SAFETY NOTE—Components marked with a (★) have special characteristics important to safety. Before replacing any of these components, read carefully the PRODUCT SAFETY NOTICE on page 2 of this Service Data. Don't degrade the safety of the set through improper servicing.

SYMBOL NO.	STOCK NO.	DRAWING NO.	DESCRIPTION
C515	134778		.033 uf 10% 50V film
C516	134778		.033 uf 10% 50V film
C517	144568		33 pf 10% 50V NPO disc
C518	144574		24 pf 10% 50V NPO disc
C519	133060		5 pf 10% 50V NPO disc
C520	165570		10 uf 16V electrolytic
C521	134778		.033 uf 10% 50V film
C522	134778		.033 uf 10% 50V film
C523	139444		.1 uf 10% 50V film
C524	139444		.1 uf 10% 50V film
C525	134778		.033 uf 10% 50V film
C526	144563		47 uf 16V electrolytic
C527	134778		.033 uf 10% 50V film
C528	127801		.01 uf GMV 50V Z5U disc
C530	144073		5 pf — 50 pf trimmer
C531	127801		.01 uf GMV 50V Z5U disc
C532	165570		10 uf 16V electrolytic
C533	104915		22 pf 10% 50V NPO disc
C534	105299		150 pf 10% 50V NPO disc
C535	127801		.01 uf GMV 50V Z5U disc
C536	127801		.01 uf GMV 50V Z5U disc
C537	165570		10 uf 16V electrolytic
C538	127801		.01 uf GMV 50V Z5U disc
C539	144563		47 uf 16V electrolytic
C540	144563		47 uf 16V electrolytic
C541	127155		120 pf 10% 50V NPO disc
C542	134778		.033 uf 10% 50V film
C543	127801		.01 uf GMV 50V Z5U disc
C545	144073		5 pf — 50 pf trimmer
C546	127801		.01 uf GMV 50V Z5U disc
C547	105299		150 pf 10% 50V NPO disc
C548	127801		.01 uf GMV 50V Z5U disc
C549	127801		.01 uf GMV 50V Z5U disc
C550	165570		10 uf 16V electrolytic
C551	165570		10 uf 16V electrolytic
C552	127801		.01 uf GMV 50V Z5U disc
C553	127369		10 pf 10% 50V NPO disc
C554	135359		.0056 uf 10% 50V film
C555	127801		.01 uf GMV 50V Z5U disc
C556	144563		47 uf 16V electrolytic
C557	165570		10 uf 16v electrolytic
C558	144575		47 uf 16V N-P electrolytic
C559	133060		6 pf 10% 50V NPO disc (Early Production)
C559	144573		47 pf 5% 50V N750 disc (Late Production)
C560	235924		47 uf 10V electrolytic
C561	107323		270 pf 5% 50V N330 disc
C562	105310		390 pf 5% 50V N330 disc
C563	124707		56 pf 10% 50V NPO disc
C564	132443		.047 uf 10% 50V film
C565	138923		1 uf 50V electrolytic
C566	127801		.01 uf GMV 50V Z5U disc
C567	144563		47 uf 16V electrolytic
C568	105310		390 pf 5% 50V N330 disc
C569	102228		220 pf 5% 50V N330 disc
C570	165570		10 uf 16V electrolytic
C601	127801		.01 uf GMV 50V Z5U disc
C602	127801		.01 uf GMV 50V Z5U disc
C603	165570		10 uf 16V electrolytic
C604	141298		4.7 uf 25V electrolytic
C605	141298		4.7 uf 25V electrolytic
C606	141426		220 uf 16V electrolytic
C607	138923		1 uf 50V electrolytic
C608	165570		10 uf 16V electrolytic
C609	144588		.15 uf 50V electrolytic
C610	144563		47 uf 16V electrolytic
C611	144576		.68 uf 50V electrolytic
C612	144563		47 uf 25V electrolytic
C613	107323		270 pf 10% 50V Z5P disc
C614	133560		100 uf 16V electrolytic
C615	165570		10 uf 25V electrolytic
C616	165570		10 uf 25V electrolytic
C617	144560		.33 uf 50V electrolytic
C618	141426		220 uf 16V electrolytic
C619	107323		270 pf 10% 50V Z5P disc
C621	141298		4.7 uf 25V electrolytic
C701	127369		10 pf 5% 50V NPO disc
C702	127369		10 pf 5% 50V NPO disc
C703	104915		22 pf 10% 50V N150 disc
C704	104224		68 pf 10% 50V N150 disc
C705	105310		390 pf 10% 50V Z5P disc
C706	124707		56 pf 10% 50V NPO disc
C707	127801		.01 uf GMV 50V Z5U disc
C708	127801		.01 uf GMV 50V Z5U disc
C709	127801		.01 uf GMV 50V Z5U disc
C710	138702		3.3 uf 16V electrolytic (Early Production)
C710	144566		33 uf 25V electrolytic (Late Production)
C711	124707		56 pf 10% 50V Z5P disc
C712	127801		.01 uf GMV 50V Z5U disc
C713	127801		.01 uf GMV 50V Z5U disc
C714	144074		5 pf — 40 pf trimmer
C715	103582		150 pf 10% 50V N150 disc (Early Production)
C715	127155		120 pf 10% 50V N150 disc (Late Production)
C716	144577		33 pf 10% 50V N220 disc
C717	127801		.01 uf GMV 50V Z5U disc
C718	127801		.01 uf GMV 50V Z5U disc
C719	104915		22 pf 10% 50V N220 disc
C720	127801		.01 uf GMV 50V Z5U disc
C721	144563		47 uf 16V electrolytic
C722	127801		.01 uf GMV 50V Z5U disc
C723	119404		10 pf 5% 50V Z5P disc
C724	133060		5 pf ± .25 pf 50V Z5P disc
C725	133560		100 uf 16V electrolytic
C726	129960		82 pf 10% 50V N150 disc
C727	138911		10 uf 16V tantalum
C728	127801		.01 uf GMV 50V Z5U disc
C729	165570		10 uf 16V electrolytic
C730	144567		82 pf 10% 50V Z5P disc
C731	144568		33 pf 10% 50V Z5P disc
C732	129357		1000 uf 10V electrolytic
C733	133398		.056 uf 10% 50V film
C734	119402		3 pf ± .25 pf 50V Z5P disc
C735	119404		10 pf 5% 50V Z5P disc
C736	78262		7 pf 10% 50V NPO disc
C737	129960		82 pf 10% 50V N220 disc
C738	132443		.047 uf 10% 50V film
C739	141495		220 uf 16V electrolytic
C740	144562		.015 uf 10% 50V film
C741	124707		56 pf 10% 50V Z5P disc
C742	139441		.01 uf 10% 50V film
C743	138923		1 uf 50V electrolytic
C744	130196		2 pf ± .25 pf 50V Z5P disc
C745	127801		.01 uf GMV 50V Z5U disc
C746	127801		.01 uf GMV 50V Z5U disc
C747	133398		.056 uf 10% 50V film
C748	144577		33 pf 10% 50V N220 disc
C749	133060		5 pf ± .25 pf 50V Z5P disc
C750	127801		.01 uf GMV 50V Z5U disc
C751	127801		.01 uf GMV 50V Z5U disc
C752	107745		56 pf 10% 50V N150 disc
C754	77252		1000 pf GMV 50V Z5U disc
C755	77252		1000 pf GMV 50V Z5U disc
C756	127801		.01 uf GMV 50V Z5U disc
C753	134436		1 pf 10% 50V NPO disc
C757	127801		.01 uf GMV 50V Z5U disc
C758	127801		.01 uf GMV 50V Z5u disc
C759	109316		15 pf 10% 50V Z5P disc
C761	144563		47 uf 16V electrolytic
C762	136342		.15 uf 10% 50V film
C763	141298		4.7 uf 25V electrolytic
C764	77252		1000 pf GMV 50V Z5U disc
C765	141495		220 uf 16V electrolytic
C766	139444		.1 uf 10% 50V film (Late Production Only)
C767	139199		100 pf 10% 50V Z5P disc (Late Production Only)
C801	138923		1 uf 50V electrolytic
C802	126919		.47 uf 50V electrolytic
C803	127801		.01 uf GMV 50V Z5U disc
C804	127801		.01 uf GMV 50V Z5U disc
C805	127801		.01 uf GMV 50V Z5u disc
C806	138923		1 uf 50V electrolytic
C807	144573		47 pf 5% 50V N750 disc
C808	144584		4.7 uf 16V N-P electrolytic
C809	165570		10 uf 16V electrolytic
C810	127801		.01 uf GMV 50V Z5U disc
C811	144573		47 pf 5% 50V N750 disc
C812	127801		.01 uf GMV 50V Z5U disc
C813	127801		.01 uf GMV 50V Z5U disc
C814	125705		27 pf 10% 50V NPO disc
C815	127801		.01 uf GMV 50V Z5U disc
C816	165570		10 uf 16V electrolytic
C817	138923		1 uf 50V electrolytic
C818	104135		680 pf 10% 50V Z5P disc
C819	138923		1 uf 50V electrolytic
C820	144584		4.7 uf 16V N-P electrolytic (Early Production)
C820	134778		.033 uf 10% 50V film (Late Production)
C821	127801		.01 uf GMV 50V Z5U disc
C822	127801		.01 uf GMV 50V Z5U disc

REPLACEMENT PARTS

(continued)

PRODUCT SAFETY NOTE —Components marked with a (*) have special characteristics important to safety. Before replacing any of these components, read carefully the PRODUCT SAFETY NOTICE on page 2 of this Service Data. Don t degrade the safety of the set through improper servicing.

SYMBOL NO.	STOCK NO.	DRAWING NO.	DESCRIPTION
C823	165570		10 uf 16V electrolytic
C824	120832		1000 pf 10% 50V Z5P disc (Early Production Only)
C825	127801		.01 uf GMV 50V Z5U disc
C826	10313		18 pf 10% 50V NPO disc
C827	102562		180 pf 10% 50V Z5P disc
C828	127801		.01 uf GMV 50V Z5U disc
C829	165570		10 uf 16V electrolytic
C830	132443		.047 uf 10% 50V film
C831	165570		10 uf 16V electrolytic
C833	134778		.033 uf 10% 50V film
C834	127801		.01 uf GMV 50V Z5U disc
C836	165570		10 uf 16V electrolytic
C837	124707		56 pf 10% 50V NPO disc
C838	105310		390 pf 10% 50V Z5P disc
C839	105310		390 pf 10% 50V Z5P disc
C840	144563		47 uf 16V electrolytic
C841	144563		47 uf 6V electrolytic
C842	144578		.0015 uf 10% 50V film
C843	139441		.01 uf 10% 50V film
C844	144072		2.5 pf — 20 pf trimmer
C845	112510		560 pf 10% 50V Z5P disc (Early Production)
C845	105301		330 pf 10% 50V Z5P disc (Late Production)
C846	127369		10 pf 10% 50V NPO disc
C847	105300		100 pf 10% 50V NPO disc
C848	127801		.01 uf GMV 50V Z5U disc
C849	112510		560 pf 10% 50V Z5P disc
C850	102228		220 pf 10% 50V Z5P disc
C851	138923		1 uf 50V electrolytic
C852	141298		4.7 uf 25V electrolytic
C853	107323		270 pf 10% 50V Z5P disc
C854	127801		.01 uf GMV 50V Z5U disc
C855	105300		100 pf 5% 50V N75 disc
C856	105300		100 pf 10% 50V NPO disc
C857	165570		10 uf 16V electrolytic
C858	127801		.01 uf GMV 50V Z5U disc
C859	165570		10 uf 16V electrolytic
C860	138911		10 uf 16V tantalum (Early Production Only)
C861	105299		150 pf 10% 50V NPO disc
C862	102230		470 pf 10% 50V Z5P disc
C863	137784		39 pf 10% 50V NPO disc
C864	127801		.01 uf GMV 50V Z5U disc
C865	127801		.01 uf GMV 50V Z5U disc
C866	144563		47 uf 6V electrolytic
C867	144563		47 uf 6V electrolytic
C868	144563		47 uf 16V electrolytic
C869	139444		.1 uf 10% 50V film
C870	139040		.0022 uf 10% 50V film
C871	127801		.01 uf GMV 50V Z5U disc
C872	127801		.01 uf GMV 50V Z5U disc
C873	165570		10 uf 16V electrolytic
C874	127801		.01 uf GMV 50V Z5U disc
C875	105300		100 pf 10% 50V NPO disc
C876	133556		39 pf 5% 50V N750 disc (Early Production)
C876	144568		33 pf 5% 50V N750 disc (Late Production)
C877	135155		47 pf 5% 50V N750 disc
C878	109316		15 pf 5% 50V N750 disc
C879	165570		10 uf 16V electrolytic
C880	144564		.1 uf 50V electrolytic
C881	141298		4.7 uf 25V electrolytic
C882	139040		.0022 uf 10% 50V film
C883	165570		10 uf 16V electrolytic (Early production)
C883	127801		.01 uf GMV 50V Z5U disc (Late production)
C884	102228		220 pf 10% 50V Z5P disc (Early production)
C884	104915		22 pf 10% 50V N220 disc (Late production)
C885	127801		.01 uf GMV 50V Z5U disc
C886	127801		.01 uf GMV 50V Z5U disc
C887	127156		68 pf 10% 50V NPO disc
C888	126343		.027 uf 10% 50V film (Early Production Only)
C889	127801		.01 uf GMV 50V Z5u disc
C890	127369		10 pf 10% 50V NPO disc (Late Production Only)
C891	144639		.033 uf 10% 50V film (Late Production Only)
C892	127801		.01 uf GMV 50V Z5U disc (Late Production Only)
C2101	139444		.1 uf 10% 50V film
C2102	144564		.1 uf 50V electrolytic
C2103	138923		1 uf 50V electrolytic
C2104	144564		.1 uf 50V electrolytic
C2105	139379		2.2 uf 50V electrolytic
C2106	144564		.1 uf 50V electrolytic
C2107	144564		.1 uf 50V electrolytic
C2108	126343		.027 uf 10% 50V film (Early Production)
C2108	139444		.1 uf 10% 50V film (Late Production)
C2110	144562		.015 uf 10% 50V film
C2111	134778		.033 uf 10% 50V film
C2112	144560		.33 uf 50V electrolytic (Early Production)
C2112	169800		.22 uf 50V electrolytic (Late Production)
C2113	144560		.33 uf 50V electrolytic (Early Production)
C2113	126919		.47 uf 50V electrolytic (Late Production)
C2114	144560		.33 uf 50V electrolytic
C2115	135048		.022 uf 10% 50V film (Early Production)
C2115	144570		.001 uf 10% 50V film (Late Production)
C2116	165570		10 uf 16V electrolytic
C2117	144564		.1 uf 50V electrolytic
C2118	141298		4.7 uf 25V electrolytic
C2119	141298		4.7 uf 25V electrolytic
C2120	141298		4.7 uf 25V electrolytic
C2121	139441		.01 uf 10% 50V film
C2122	126919		.47 uf 50V electrolytic
C2123	135359		.0056 uf 10% 50V film
C2124	165570		10 uf 16V electrolytic
C2125	144563		47 uf 16V electrolytic
C2126	144563		47 uf 16V electrolytic
C2127	102230		470 pf 10% 50V Z5P disc
C3100	104135		680 pf 10% 50V Z5P disc
C3101	127801		.01 uf GMV 50V Z5U disc
C3102	165570		10 uf 16V electrolytic
C3103	144567		82 pf 10% 50V NPO disc
C3104	127801		.01 uf GMV 50V Z5U disc
C3105	127801		.01 uf GMV 50V Z5U disc
C3106	144567		82 pf 10% 50V NPO disc (Early Production Only)
C3107	127801		.01 uf GMV 50V Z5U disc
C3108	127801		.01 uf GMV 50V Z5U disc
C3109	138923		1 uf 50V electrolytic
C3110	165570		10 uf 16V electrolytic
C3111	165570		10 uf 16V electrolytic
C3112	165570		10 uf 16V electrolytic
C3113	165570		10 uf 16V electrolytic
C3115	133560		100 uf 10V electrolytic
C3116	103582		150 pf 10% 50V Z5P disc
C3118	105310		390 pf 10% 50V Z5P disc
C3120	144563		47 uf 16V electrolytic (Early Production Only)
C3127	105300		100 pf 10% 50V NPO disc
C3201	105310		390 pf 10% 50V Z5P disc
C3202	144579		100 uf 6V N-P electrolytic
C3203	103582		150 pf 10% 50V Z5P disc
C3204	139284		220 uf 6V electrolytic
C3205	105301		330 pf 5% 50V N330 disc
C3206	127369		10 pf 10% 50V NPO disc
C3207	105310		390 pf 5% 50V N330 disc
C3209	102230		470 pf 5% 50V N330 disc (Early Production Only)
C3210	144580		200 pf 5% 50V N330 disc (Early Production Only)
C3211	165570		10 uf 16V electrolytic
C3212	102228		220 pf 10% 50V Z5P disc
C3213	165570		10 uf 16V electrolytic
C3214	127156		68 pf 10% 50V NPO disc (Late Production Only)
C3215	165570		10 uf 16V electrolytic
C6303	134778		.033 uf 10% 50V film
C6304	134778		.033 uf 10% 50V film
C6401	144564		.1 uf 50V eletrolytic
C6404	138923		1 uf 50V electrolytic
C6405	144561		820 pf 10% 50V Z5P disc
C6406	138923		1 uf 50V electrolytic
C6407	144561		820 pf 10% 50V Z5P disc
C6408	144588		.15 uf 50V electrolytic
C6409	127801		.01 uf GMV 50V Z5U disc
C6410	127801		.01 uf GMV 50V Z5U disc
C6412	165570		10 uf 16V electrolytic
C6413	165570		10 uf 16V electrolytic

REPLACEMENT PARTS

(continued)

PRODUCT SAFETY NOTE—Components marked with a (*) have special characteristics important to safety. Before replacing any of these components, read carefully the PRODUCT SAFETY NOTICE on page 2 of this Service Data. Don't degrade the safety of the set through improper servicing.

SYMBOL NO.	STOCK NO.	DRAWING NO.		DESCRIPTION
C6414	165570			10 uf 16V electrolytic
C6415	165570			10 uf 16V electrolytic
C6416	127801			.01 uf GMV 50V Z5U disc
C6417	144563			47 uf 16V electrolytic
				DIODES
D101	144051		*	
D102	144050		*	
D103	144050		*	
D104	144050		*	
D105	144050		*	
D106	144050		*	
D107	144052		*	
D108	144052		*	
D202	144585			
D203	144581			
D204	144581			
D205	144057			
D206	144581			
D207	144581			
D208	144057			
D209	144581			
D210	144581			
D212	144581			
D213	144056			Zener
D214	144581			
D215	144581			
D216	144581			
D217	144057			
D218	144581			
D219	144581			
D220	144581			
D221	144056			Zener
D301	144581			
D302	144581			
D303	144581			
D304	144581			
D305	143162			
D306	143162			
D307	144581			
D308	144581			
D309	144581			(Early Production Only)
D310	144581			
D401	144581			
D402	144581			
D403	144581			
D404	144581			
D405	144581			
D406	144581			
D501	144581			
D502	144581			
D503	144053			
D505	144581			
D506	144581			
D507	143162			
D508	143162			
D509	143162			
D510	143162			
D511	143162			
D512	143162			
D601	144581			
D602	144581			
D603	144581			
D604	144581			
D605	144581			
D606	144581			
D607	144581			
D608	144581			
D609	144581			
D610	144581			
D611	144581			
D612	144581			
D613	144581			
D614	144052			
D615	144052			
D616	144581			
D617	144581			
D618	144581			
D619	144581			
D620	144581			
D621	144581			
D622	144581			
D623	144581			
D624	144581			
D625	144581			
D626	144581			
D627	144581			
D628	144581			(Early Production Only)
D629	144581			
D630	144056		*	
D631	144581			
D632	144052			
D633	144581			
D634	144581			
D635	144581			
D636	144052			
D637	144581			
D638	144581			
D639	144056		*	Zener
D640	144581			
D641	144581			
D642	144581			
D643	144581			
D644	144581			
D645	144056		*	Zener
D646	144581			
D647	144581			
D648	144581			
D649	144581			
D701	144054			
D702	144054			
D703	144054			
D704	144054			
D705	144054			
D706	144054			
D707	144055			
D708	144055			
D801	144581			
D802	144581			
D803	144585			
D804	144581			
D805	144581			
D806	144581			
D807	144581			
D808	144581			
D809	144581			
D810	144581			
D811	144581			
D2101	144581			
D2102	144581			
D2103	144581			
D2104	144581			
D3201	143162			
D3202	143162			
D3203	143162			(Early Production Only)
D3204	143162			(Early Production Only)
D6301	144058			Light emiting
D6302	144059			Light emiting
D6303	144060			Light emiting
D6304	144025			Reel sensor
D6401	144581			
D6402	144581			
D6403	144581			
D6404	144581			
D6405	144581			
D6406	144581			
D6407	144581			
D6408	144581			
D6409	144581			
D6410	144581			
D6411	144581			
D6412	144581			
D6413	144581			
D6414	144581			
D6415	144581			
D6416	144581			
D6417	144581			
D6418	144581			
D6419	144581			
D6420	144581			
D6421	144581			
D6422	144581			
DL301	144190			Delay line
DL801	144191			Delay line
F101	144188		*	Fuse
F102	144187		*	Fuse
F103	144187		*	Fuse
F104	144189		*	Fuse
				CERAMIC FILTERS
FL301	144176			Filter — ceramic
FL302	144178			Filter — ceramic (Early Production Only)

REPLACEMENT PARTS

(continued)

PRODUCT SAFETY NOTE—Components marked with a (★) have special characteristics important to safety. Before replacing any of these components, read carefully the PRODUCT SAFETY NOTICE on page 2 of this Service Data. Don't degrade the safety of the set through improper servicing

SYMBOL NO.	STOCK NO.	DRAWING NO.	DESCRIPTION
FL303	144179		Filter — ceramic
FL304	144177		Filter — ceramic
FL305	144181		Filter — ceramic
FL306	144175		Filter — ceramic
FL307	144180		Filter — ceramic
FL308	144170		Filter — ceramic
FL701	144171		Filter — ceramic
FL801	144170		Filter — ceramic
FL802	144172		Filter — ceramic (Early production)
FL802	144611		Filter — ceramic (Late production)
FL803	144173		Filter — ceramic (Early production)
FL803	144611		Filter — ceramic (Late production)
			INTEGRATED CIRCUITS
IC201	144017		Servo L S I.
IC202	144023		Tracking pulse processor
IC203	144019		CTL pulse processor
IC301	144013		Luminance processor
IC302	144016		D.O C. pulse processo
IC303	144008		FM video processor
IC304	144014		E/E processor
IC401	144012		Audio processor
IC501	144009		Video head A processor
IC502	144009		Video head B processor
IC701	144027		Video/AGC
IC702	144026		Audio processor
IC801	144015		Chroma processor
IC802	144018		Chroma L.S.I.
IC803	144024		Sync processor
IC804	144011		3.58MHz/APC/killer proc.
IC805	144612		60 Hz reference proc. AN6342 — Late Production
IC805	144010		60 Hz reference proc. MN5369N — Early Production
IC2101	144022		FG pulse regulator
IC2102	144020		D.D. motor drive L S.I.
IC6401	144023		Integrated SP/LP Ctl pulse proc.
IC6402	144022		Integrated regulator
IC6403	144021		Integrated SP/LP FG pulse proc.
J6301	144341		Connector — remote
J6302	144241		Connector — rca jack
J6303	144338		Connector — microphone
J6305	144318		Connector — RF converter interconnect
			COILS
L101	144139		
L201	144127		
L301	144121		
L302	144110		
L303	144119		
L304	144123		
L305	144124		
L306	144115		
L307	144111		
L308	144111		
L309	144123		
L310	144123		
L311	144118		
L312	144121		
L313	144141		
L314	144121		
L315	144114		
L316	144121		
L317	144119		
L318	144114		
L319	144123		
L320	144114		(Early Production Only)
L321	144123		
L322	144123		
L323	144123		
L324	144123		
L327	144114		
L328	144123		
L329	144122		(Late Production Only)
L401	144125		
L402	144112		
L403	144125		(Early Production Only)
L404	144164		(Early Production Only)
L405	144128		
L406	144126		
L501	144141		
L502	144141		
L503	144141		
L504	144122		
L505	144120		
L506	144123		
L507	144121		
L508	144123		
L509	144113		
L511	144113		
L513	144162		Audio trap
L514	144123		
L515	144123		
L516	144123		
L517	144116		
L518	144123		
L519	144116		
L701	144130		
L702	144138		
L703	144133		
L704	144131		
L705	144138		
L706	144117		
L707	144132		
L708	144132		
L709	144133		
L710	144137		
L711	144116		
L712	144138		
L713	144131		
L714	144138		
L715	144131		
L716	144110		
L717	144133		
L801	144123		
L802	144121		
L804	144119		
L803	144117		
L805	144129		
L806	144123		
L807	144123		
L808	144109		
L809	144116		
L810	144123		(Early Production Only)
L811	144123		
L812	144114		
L814	144121		
L3201	144123		
L3202	144121		(Late Production Only)
			CONNECTORS
	144343		3 pin P28, P29, P32, P36, P41, P54, P62
	144347		3 pin P604, P606, P607, P608, P613, P614, P620
	144344		5 pin P23, P25, P27, P35, P37, P38, P42, P52, P55, P61, P602, P609, P611, P617, P618, P702, P703
	144346		10 pin P11, P21, P22, P24, P26, P31, P33, P34, P39, P43, P51, P53, P62, P63, P64, P65, P619
	144348		10 pin P601, P603, P612
PL6301	144604		Lamp — sensor
			RESISTORS
R206	144080		Control record shifter
R213	144079		Control PG shifter
R215	144079		Control capstan motor free-run
R245	144079		Control PG shifter
R248	144079		Control cylinder motor free-run
R250	144080		Control tracking fix
R394	144083		Control frequency response
R396	144077		Control playback NL level
R404	144089		Control PB equalizer
R405	144085		Control PB gain
R432	144096		33 ohm 5% 1W film
R503	144088		Control FM modulator balance
R526	144077		Control luminance record level
R553	144089		Control Q-A
R554	144089		Control middle A
R565	144089		Control Q-B
R566	144089		Control middle B
R575	144089		Control mixer (head balance)
R596	144088		Control half FH
R602	144078		Control supply sensor
R608	144078		Control takeup sensor
R624	144097		330 ohm 5% 1W film
R625	144097		30 ohm 5% 1W film
R631	144103	★	2.2 ohm 5% 1W film

REPLACEMENT PARTS

(continued)

PRODUCT SAFETY NOTE—Components marked with a (★) have special characteristics important to safety. Before replacing any of these components, read carefully the PRODUCT SAFETY NOTICE on page 2 of this Service Data. Don t degrade the safety of the set through improper servicing.

SYMBOL NO.	STOCK NO.	DRAWING NO.	DESCRIPTION
R642	144099		62 ohm 5% 2W film
R660	144098		1 k ohm 5% 1W film
R664	144097		330 ohm 5% 1W film
R678	144077		Control 12V
R702	144087		Control adjacent sound reject
R718	144087		Control sound reject
R727	144089		Control RF AGC
R739	v144104		3.9 ohm 1% 1/2W film
R740	144089		Control audio level
R751	144088		Control AFC level
R820	144089		Control chroma record level
R858	144084		Control chroma modulator balance
R861	144089		Control mix (comb. filter)
R2122	144096		33 ohm 5% 1W film
R2123	144089		Control osc level
R2143	v144102		.82 ohm 5% 1W film
R3161	144088		Control deviation
R3162	144084		Control white clip
R3163	144084		Control dark clip
R3164	144077		Sync tip frequency
R3165	144085		Control limiter balance
R3166	144085		Control demodulator balance
R3167	144088		Control playback video level
R3169	144083		Control E-E video level
R3170	144089		Control playback chroma level
R3171	144088		Control Y-C timing (Early Production Only)
R5100	144088		Control NL level
R6301	144086		Control tracking
R6417	144079		Control SP/LP detect shifter
R6429	144078		Control LP capstan free run
R8107	144079		Control 2μS pulse
R8118	144088		Control 2 517 MHz AFC
R8119	144079		Control color killer
R8120	144083		Control 3.58 MHz APC
			SWITCHES
S201	144066		Slide, Play/Record
S401	144067		Slide, Play/Record
S601	144068		Leaf, F.Fwd.
S602	144068		Leaf, Play
S603	144068		Leaf, Rewind
S604	144068		Leaf, Pause
S6302	144070		AC power
S6303	144091		Tuner/Camera
S6304	144068		Leaf, unloading finish
S6305	144068		Leaf, loading finish
S6306	144069		Play switch No. 2
S6307	144090		Memory counter
S6308			Part of circuit board 144300
S6309	144092		SP/LP select
S6312	144064		AFT
S6312	144065		TV/VCR
			TRANSFORMERS
T301	144143		(Early Production Only)
T302	144142		3.58 MHz trap
T303	144143		
T304	144144		
T306	144143		
T307	144140		
T308	144145		3.58 MHz B.P.F. adjust
T401	144163		Bias oscillator
T501	144610		
T701	144152		41.25 MHz trap
T702	144161		IF input
T703	144158		1st video IF
T704	144160		2nd video IF primary
T705	144153		2nd video IF secondary
T706	144151		3rd video IF
T707	144155		3rd video IF
T708	144156		4.5 MHz trap
T709	144154		Sound IF
T710	144157		AFT primary
T711	144159		AFT secondary
T801	144149		
T802	144147		
T803	144148		
T804	144146		
T805	144146		
T3201	144140		
T6301	144107		★ Power
T6302	144108		★ Timer
			TRANSISTORS
TR201	144044		Buffer
TR202	144044		Buffer
TR203	144044		Sampling gate
TR204	144034		Buffer
TR205	144044		Buffer
TR206	144044		Motor drive
TR207	144044		Motor drive
TR208	144031		Motor drive
TR209	144038		Motor drive
TR210	144030		Switching
TR211	144030		Pulse amp
TR212	144044		Ctl pulse amp
TR213	144044		Inverter
TR214	144044		Switching
TR215	144044		Switching
TR216	144044		Mute switch
TR217	144044		Switching
TR218	144033		Delay switch
TR219	144044		Switching
TR301	144035		Buffer
TR302	144035		Switching
TR303	144035		Switching
TR304	144035		White clip
TR305	144035		Dark clip (Early Production)
TR305	144030		Dark clip (Late Production)
TR306	144035		Inverter
TR307	144030		2us pulse amp
TR308	144035		D.O.C. pulse amp
TR309	144035		Fm amp
TR310	144035		Buffer
TR311	144035		Fm amp
TR312	144035		Buffer
TR314	144030		Video amp
TR315	144035		Video amp
TR316	144030		Video amp
TR317	144035		Buffer
TR318	144030		Switching
TR319	144035		Switching
TR320	144035		Buffer
TR321	144035		Switching
TR322	144035		Video amp
TR323	144035		Chroma amp
TR324	144035		Burst amp
TR325	144036		Burst gate
TR326	144035		Switching
TR327	144035		FM amp
TR328	144035		Buffer
TR329	144030		Sync front pulse amp
TR330	144035		Switching
TR401	144043		Muting
TR402	144043		Switching
TR403	144182		Bias oscillator (Early Production)
TR403	741856		Bias oscillator (Late Production)
TR404	144182		Bias oscillator (Early Production)
TR404	741856		Bias oscillator (Late Production)
TR405	144039		Switch (4 hr. rec.) (Early Production)
TR405	144053		Switch (4 hr. rec.) (Late Production)
TR406	144043		Switch (4 hr. P.B.)
TR501	144049		FM demodulator
TR502	144049		FM demodulator
TR503	144035		FM amp
TR504	144035		Buffer
TR505	144035		Switching
TR506	144035		Switching
TR507	144582		Record amp
TR508	144035		Record amp
TR509	144030		Record amp
TR510	144035		Record amp
TR512	144038		Switching
TR513	144039		Switching
TR514	144039		Switching
TR515	144039		Switching
TR516	144582		P.B. amp
TR517	144049		Switching
TR518	144582		P.B. amp
TR519	144049		Switching
TR520	144035		Switching
TR521	144582		Buffer
TR522	144582		Buffer
TR523	144035		Inverter
TR524	144030		Switch pulse amp
TR525	144030		Switch pulse amp
TR526	144035		Video amp
TR527	144035		Video amp
TR528	144035		Buffer
TR529	144035		Switching
TR530	144030		Switching
TR531	144035		Buffer
TR601	144040		Supply sensor
TR602	144043		Supply sensor
TR603	144040		Take up sensor

REPLACEMENT PARTS

(continued)

PRODUCT SAFETY NOTE—Components marked with a (*) have special characteristics important to safety. Before replacing any of these components, read carefully the PRODUCT SAFETY NOTICE on page 2 of this Service Data. Don't degrade the safety of the set through improper servicing.

SYMBOL NO.	STOCK NO.	DRAWING NO.		DESCRIPTION
TR604	144043			Take up sensor
TR605	144039			Motor drive
TR606	144045			Motor drive
TR607	144033			Motor drive
TR608	144033			Motor drive
TR609	144045			Motor drive
TR610	144039			Motor drive
TR611	144043			Motor drive
TR612	144043			Switching
TR613	144034			Stop solenoid drive
TR614	144043			Stop solenoid drive
TR615	144043			Stop solenoid drive
TR616	144045			Stop solenoid drive
TR617	144041			Stop solenoid drive
TR618	144043			Normal/pause switching
TR619	144043			Normal/pause switching
TR620	144039			Pressure roller solenoid drive
TR621	144129			Pressure roller solenoid drive
TR622	144041			Pressure roller solenoid drive
TR623	144039			Dew lamp drive
TR624	144043			Dew lamp drive
TR625	144043			Dew lamp drive
TR626	144043			Dew lamp drive
TR627	144041		*	12V driver
TR628	144043		*	12V driver
TR629	144043			Timer switching
TR630	144043			Timer switching
TR631	144034			Cylinder lock detector
TR632	144043			Cylinder lock detector
TR633	144040			Cylinder lock detector
TR634	144043			Cylinder lock detector
TR701	144048			1st video IF
TR702	144583			2nd video IF
TR703	144583			3rd video IF
TR704	144047			Video amp
TR705	144583			Carrier amp
TR706	144043			AFC amp
TR801	144835			Switching
TR802	144035			Buffer
TR803	144035			Buffer
TR804	144035			Switching
TR805	144035			Switching
TR806	144037			Burst gate
TR807	144035			Burst
TR808	144035			Burst inhibit
TR809	144035			Burst inhibit
TR810	144035			Inverter
TR811	144035			Buffer
TR812	144035			Chroma amp
TR813	144035			Buffer
TR814	144035			Burst gate
TR815	144035			Switching
TR816	144035			Switching
TR817	144035			Inverter
TR818	144030			DC amp
TR819	144030			DC amp
TR820	144035			Switching
TR821	144835			Inverter
TR2101	144044			FG pulse amp
TR2102	144030			FG pulse amp
TR2103	144044			FG pulse amp
TR2104	144044			Inverter
TR2105	144044			Active filter
TR2106	144044			Active filter
TR2107	144033			M1 drive
TR2108	144033			M2 drive
TR2109	144033			M3 drive
TR2110	144045			M1 drive
TR2111	144045			M2 drive
TR2112	144045			M3 drive
TR2113	144044			Current feedback
TR2114	144044			Current feedback
TR2115	144044			P.G. pulse amp
TR3201	144035			Video amp
TR3202	144035			Buffer
TR3203	144582			Video amp
TR3204	144582			Video amp
TR3205	144035			Buffer
TR3206	144582			Video amp (Early Production Only)
TR3207	144582			Video amp (Early Production Only)
TR3208	144035			Buffer (Early Production Only)
TR3209	144035			SP/LP switching (Early Production Only)
TR3210	144030			SP/LP switching
TR3211	144035			Buffer

SYMBOL NO.	STOCK NO.	DRAWING NO.		DESCRIPTION
TR6301	144046		*	12V Regulator
TR6302	144028			Supply photo sensor
TR6303	144028			Take up photo sensor
TR6401	144043			Inverter
TR6402	144043			SP/LP switching
TR6403	144043			SP/LP switching
TR6404	144043			Inverter
TR6405	144043			SP/LP switching
TR6406	144043			SP/LP switching
TR6409	144043			SP/LP muting
TR6410	144043			Inverter
TR6411	144043			Inverter
TR6412	144043			Inverter
Y701	144062			Crystal
Y702	144061			Crystal
Y703	144063			Crystal
Y801	144003			Crystal
Y802	144003			Crystal
	144342			Block — w/audio & video jacks
	144305			Board — antenna
	144075			Lamp — UHF/VHF
	144351			Socket — transistor
	144004			Timer — digital
	144749			Case — timer
	144750			Lid — timer switches

MECHANICAL — TAPE TRANSPORT

1	144240	Capstan holder
2	144192	Capstan shaft
3	144304	Capstan thrust bracket
4	144006	Capstan motor
5	144314	Play arm
6	144265	Play idler
7	144315	Play pulley
8	144375	Rewind arm
9	144262	Rewind roller
10	144248	Main pulley
11	144263	Fast forward idler
12	144376	Fast forward arm
13	144199	Fast forward arm spring
14	144290	Washer
15	144320	Grip ring
16	144246	Intermediate pulley
17	144218	Take up reel table
18	144219	Supply reel table
19	144264	Pressure roller
20	144402	Pressure roller arm
21	144408	Thrust boss
23	144324	Set screw
24	144200	Spring A
25	144403	Spring bracket
26	144404	Connecting lever
27	144405	Pressure link
28	144406	Pressure lever
29	144407	Pressure pin
30	144201	Adjust spring
32	144321	Grip ring
33	144489	Screw
35	144186	Pressure roller solenoid
37	144411	Solenoid lever
38	144412	Spring bracket
39	144559	Solenoid pin
40	144317	E-ring
41	144363	Screw
42	144414	Clamp
43	144202	Pressure lever spring
44	144415	Connecting lever
45	144416	Action lever
46	144413	Cam lever
47	144417	Tension arm
48	144418	Tension band
49	144419	Brake A
50	144420	Brake B
51	144421	Sub tension arm A
52	144422	Sub tension arm B
53	144423	Impedance roller arm L
54	144424	Erase head base
55	144183	Full erase head
56	144209	Impedance roller spring
57	144365	Screw
59	144294	Washer
60	144364	Impedance roller arm R
61	144425	Loading ring A
62	144426	Loading ring B

REPLACEMENT PARTS

(continued)

PRODUCT SAFETY NOTE -Components marked with a (★) have special characteristics important to safety. Before replacing any of these components, read carefully the PRODUCT SAFETY NOTICE on page 2 of this Service Data. Don t degrade the safety of the set through improper servicing.

SYMBOL NO.	STOCK NO.	DRAWING NO.	DESCRIPTION
63	144286		Roller bracket A
64	144427		Roller bracket B
65	144428		"V" block
66	144429		"V" block
67	144430		Loading post R
68	144431		Loading post L
69	144558		Loading base
70	144193		Shaft retaining spring
71	144432		Tension spring bracket
72	144613		Rivet — plastic
73	144360		Screw
75	144359		Screw
76	144374		Loading motor and pulley
77	144259		Loading belt
78	144308		Lock washer
79	144207		Loading gear assy.
81	144508		Switch link
83	144357		Screw
85	144433		Cassette opener
85	144997		Cassette opener (Late Production)
86	144434		Transistor bracket
87	144362		Screw
88	144198		Play arm spring B
89	144206		Play lever spring
94	144303		Micro switch insulator
95	144435		Actuator
96	144366		Screw
97	144436		Cassette lifter
97	144996		Cassette lifter (Late Production)
98	144437		Cassette holder
98	144998		Cassette holder (Late Production)
99	144438		Cassette lifter shaft
100	144439		Left stand
101	144440		Right stand
102	144441		Cassette lifter arm
102	144999		Cassette lifter arm (Late Production)
103	144442		Cushion for stand
104	144213		Cassette lifter spring
106	144322		E-ring
107	144339		E-ring
108	144214		Lock spring
109	144273		Play button
110	144274		Rewind button
111	144275		Fast forward button
112	144242		Record button
113	144210		Audio dub button
114	144222		Stop button
115	144443		Button frame bracket B
116	144444		Button frame bracket A
117	144445		Button slide lever
118	144446		Button frame
119	144185		Stop solenoid
120	144447		Button lever
121	144448		Button spring plate
124	144233		Button spacer
125	144449		Button slide lever A
126	144217		Button lever spring
130	144215		Solenoid spring
131	144450		Leaf lever
132	144216		Leaf lever spring
133	144358		Screw
134	144276		Pause button
135	144277		Eject button
136	144451		Connecting lever
138	144452		Cassette arm A
139	144453		Cassette arm B
140	144454		Pause slide lever
141	144455		Eject link
142	144005		Dew detector
143	144456		Lamp bracket
144	144457		Band release lever
145	144458		Fuse cover
147	144459		Audio/control head base
148	144460		Bracket
151	144235		Lamp spacer
152	144231		Slide washer A
153	144461		Eject lever
154	144462		Charge slide lever
155	144463		Soft brake lever
156	144464		Play slide lever
157	144465		Record slide lever B
158	144466		Record slide lever A
160	144467		Rewind slide lever
161	144468		Check slide lever
162	144469		Fast forward slide lever
163	144470		Rewind lever
164	144471		Connecting link
165	144237		Safety link
166	144472		Fast forward lever
167	144196		Rewind arm spring
168	144224		Sub roller A
169	144225		Loading roller
170	144473		Tension arm base
171	144205		Eject lever spring
172	144211		Sub tension spring B
173	144474		Idler stop
174	144220		Return spring B
175	144475		Sub play arm
176	144476		Spacer
177	144234		Spacer
178	144515		Charge link
179	144197		Play arm spring A
180	144252		Thrust bearing
181	144208		Brake arm spring
182	144477		Cassette support
183	144223		Post spring B
184	144478		Post sleeve B
185	144479		Adjusting nut
186	144480		Spring hook lever
188	144594		Roller
189	144595		Arm — threading
190	144481		Cam lever B
191	144204		Cam lever spring
192	144482		Cassette stand base
193	144203		Tension arm spring
194	144605		Capstan belt A — slow speed
194	144606		Capstan belt B — normal speed
194	144266		Capstan belt C — fast speed
195	144258		Reel belt A
196	144267		Reel belt B
197	144483		Oiler
198	144232		Oil cap
199	144484		Frequency generator wheel
200	144557		Fastener
201	144486		Set screw
203	144356		Tapping screw
204	144295		Washer
205	144302		Washer
206	144297		Washer
209	144316		E-ring
210	144487		E-ring
212	144323		Screw
216	144361		Screw
217	144490		Washer
218	144491		Washer
220	144492		Switch link assy.
223	144493		Audio slide lever
224	144494		Servo slide lever
228	144212		Switch lever spring
229	144495		Center bracket A
230	144496		Left corner bracket
234	144497		Pulley bracket B
235	144244		Connecting pulley
236	144498		Pulley bracket C
237	144261		Counter belt B
238	144292		Washer
239	144319		Grip ring
240	144337		Tapping screw
241	144499		Shield washer
242	144226		Ac switch button
245	144500		Antenna switch lever A
247	144501		Antenna switch lever C
248	144502		Antenna switch indicator
249	144333		Antenna switch holder A
251	144221		Antenna indicator spring
252	144503		Antenna indicator decoration
255	144330		Tapping screw
256	144238		Antenna switch holder B
257	144329		Screw
258	144504		Antenna switch washer
259	144505		Cassette guide
260	144281		Cassette cover
261	144506		Switch cover B
262	144284		Front panel
263	144272		Logo
264	144507		Switch cover A
265	144278		VHF indicator
266	144279		UHF indicator
267	144282		Side panel
268	144268		Fine tune knob
269	144269		Selector knob
270	144309		AFT button
271	144283		Top panel

REPLACEMENT PARTS

(continued)

PRODUCT SAFETY NOTE—Components marked with a (*) have special characteristics important to safety. Before replacing any of these components, read carefully the PRODUCT SAFETY NOTICE on page 2 of this Service Data. Don t degrade the safety of the set through improper servicing.

SYMBOL NO.	STOCK NO.	DRAWING NO.	DESCRIPTION
272	144270		Tracking knob
273	144280		Back panel
275	144509		Bottom panel
277	144511		Screw
278	144512		Screw
279	144380		Lock screw
281	144382		Lock screw
282	144514		Washer
283	144381		Lock screw
285	144516		Tapping screw
292	144285		Accessory case
295	144288		Antenna matching adapter
296	144287		Input cable — coax
297	144517		Output cable — twin lead
298	144518		Coax adapter
299	144519		Remote pause switch
301	144239		Power button panel
302	144093		Counter
306	144520		Switch bracket
307	144521		AC panel
308	144522		AC cable retainer
310	144289		AC cable
311	144523		AC switch bracket
317	144525		Bracket — eject link
318	144243		Guide pulley
319	144260		Counter belt A
321	144526		Support bracket C
322	144527		Servo board bracket A
323	144528		Servo board bracket C
324	144529		Video board bracket A
325	144530		Video board bracket B
326	144531		Head amp board bracket A
327	144532		Head amp board bracket B
328	144533		Support bracket
329	144534		Audio board bracket
330	144535		Select board bracket F
331	144536		Select board bracket G
334	144614		Rivet — plastic
335	144537		Jack bracket
336	144538		Left handle
342	144539		Indicator stop
343	144540		UHF tuner bracket
347	144541		Lamp bracket
348	144542		Antenna switch lever B
349	144488		Antenna switch bracket P
352	144543		Tapping screw
356	144546		Tapping screw
357	144547		Screw
359	144340		Screw
362	144334		Screw
363	144335		Screw
364	144550		Tapping screw
365	144551		Lock washer
366	144552		Lock washer
369	144553		Lead clamp large
370	144554		Lead clamp small
372	144556		Bushing
375	144555		Clamp
377	144257		Upper cylinder (Includes video heads)
378	144256		Direct drive cylinder
379	144596		Screw
380	144597		Washer
383	144598		Screw
384	144599		Foot
394	144601		Cap — pressure roller
396	144602		Spring — rewind arm
398	144516		Tapping Screw
402	144603		Spring — basket lock
	144285		Accessory case
	144288		Antenna matching adapter
	144518		Coax adapter
	144287		Input cable — coax
	144517		Output cable — twin lead
	144519		Remote pause switch
			VCR TOOLS
	144386		Adaptor — torque measuring (use only with torque gauge Model No. 600ATG)
	144600		Adaptor — torque measuring (use only with torque gauge Model No. 651C-2)
	144390		Plate — height reference (includes metal bar 144609)
	144391		Gauge — height adjustment (includes holder 144608)
	144608		Holder — for height adjustment gauge (metal 40mm x 20mm x 18mm) included with gauge 144391
	144609		Bar — used with height reference plate (metal 40mm x 10mm x 5mm) included with plate 144390
	144392		Jig (Tool) — cassette carm adjustment (includes guide 144607)
	144607		Guide — used with cassette arm jig (2 req'd 36mm x 26.7mm x 10mm) included with jig 144392
	144387		Screwdriver — tape transport adjustment
	144388		Drive — tension adjustment
	144389		Screwdriver — tape guide adjustment
	144393		Jig (Plate) — reference for capstan adjustment
	144394		Jig (Tool) — cassette lift assembly position adjustment
	144397		Tape — test
	144396		Gauge — torque
	144395		Pliers — grip ring
	144401		Tool — hex key set
	144399		Screwdriver — 3-4mm screw
	144398		Screwdriver — 2.6mm screw
	144400		Forceps — 6" curved
	199050		Kit — lub (includes 144589, 144590, 144591, 144592)
	144589		Kit — head cleaning
	143701		Grease — tuners
	144590		Grease — VCR mechanism
	144591		Oil — VCR mechanism
	144592		Solvent — VCR mechanism
			ACCESSORIES
		1423612-1	Book — instruction

Specifications Subject to Change Without Notice

CONSULT YOUR RCA DISTRIBUTOR FOR REPLACEMENT PARTS AND ACCESSORIES

FILE
VC-1

Video Camera Service Data

Model BW001



RCA Corporation
Consumer Electronics

Technical Publications

600 N Sherman Dr | Indianapolis, Indiana 46201

SAFETY CAUTION:

Before servicing this chassis, it is important that the service technician read and follow the "Safety Precautions" and "Product Safety Notices" in this Service Data.

SPECIFICATIONS

CAMERA

Ambient Operating Temperature	14°F 122°F (−10°c +50°c)
Automatic Light Compensation	5-10.000 foot-candles
Camera Mounting	One 1/4" - 20 threaded hole
Dimensions	2 13/16" (W) x 10 5/8" (H) x 8 7/16" (D) (71(W) x 269.5(H) x 213.5(D) mm)
Horizontal Resolution	450 lines at center
Lens Mounting	Standard C-Mount Lens
Minimum Illumination	5 foot-candles (50 lux) with F 1.6 lens (incandescant light)
Scanning	525 Lines/60 Fields/30 Frames
Signal To Noise Ratio	40db
Sync	Internal 2:1 Interlace
Video output	1.0V p-p Composite. Negative Sync. 75 ohms
Vidicon Tube	2/3" Electrostatic Focus. Electromagnetic Deflection
Weight	2 1/4 lb (1 kg)

POWER SUPPLY

Audio output impedance	1k ohm
Audio output frequency response	100-10.000 Hz
Audio output level	Line output - 20 db Mic. output - 60 db
Dimensions	5 13/16" (W) x 2 11/16" (H) x 4" (D) (148(W) x 68.5(H) x 102(D) mm)
Horizontal Drive Frequency	15.75kHz
Power Source	120 Volts AC 60Hz
Power Consumption	9 W
Vertical Drive Frequency	60 Hz
Weight	2 1/4 lb. (1kg)

SERVICE DATA CONTENTS

	Page
Basing Guides	19
Block Diagram	3
Circuit Boards	
High Voltage	7.15
Microphone	16
Power Supply	16
Power Switch	16
Video and Deflection	7.15
Circuit Description	9.10.11
Disassembly Instruction	8
Exploded Views	
Camera	13.14
Power Supply	12
Integrated Circuits	19
Major Operating Components	4.5
Replacements Parts	20.21
Schematic	
Camera	17.18
Power Supply	16
Service Check	8
Service Adjustments	6
Vidicon Replacement	6

First Edition — First Printing

Copyright 1978 — RCA Corporation | Consumer Electronics
Printed in U.S.A. — Trademark(s)® Registered — Marca(s) Registrada(s)

SAFETY PRECAUTIONS

Before returning any instrument to the customer a safety check of the entire camera and power supply (including approved accessories/cables/connectors) should be made. The service technician must be sure that no protective device built into the instrument by the manufacturer has become defective or inadvertently defeated during servicing.

Comply with all caution and safety related notes located on or inside the camera and power supply (including approved accessories/cables/connectors) cabinet or on the chassis.

WARNING: Alterations of the design or circuitry of this camera and power supply (including approved accessories/cables/connectors) should not be made.

Any design alterations or additions such as, but not limited to, circuit modifications, auxiliary speaker jacks, switches, grounding, active or passive circuitry, use of unauthorized camera, cables, accessories, etc. may alter the safety characteristics of this camera and power supply (including approved accessories/cables/connectors) and potentially create a hazardous situation for the user.

Any design alterations or unauthorized additions will void the manufacturer's warranty and will further relieve the manufacturer of responsibility for personal injury or property damage resulting therefrom.

When reassembling the camera and power supply (including approved accessories/cables/conectors), always be certain that all the protective devices are put back in place, such as non-metallic control knobs, insulating fishpapers, adjustment and compartment covers/shields, isolation resistor capacitor networks, etc.

When service is required, observe the original lead dress. Components wires, or cables that indicate evidence of overheating or other electrical or mechanical damage should be replaced.

Cold Check

Conduct this test on the power supply unit with the camera disconnected and repeat with the camera and power supply properly assembled. Also, repeat test with and without available approved accessories/cables/connectors.

With the AC plug removed from the 120V AC source, place a jumper across the two plug prongs. Turn the instrument AC switch on. Using an ohmmeter, connect one lead to the jumpered AC plug and touch the other lead to each exposed terminal, screw and coaxial connector. The resistance measured should not be less than 1.0 megohm or greater than 5.2 megohms. Any resistance value below or above this range indicates an abnormality which requires corrective action. Repeat the test with the AC switch in the "off" position.

Leakage Current Hot Check

Conduct this test on the power supply unit with the camera disconnected and repeat with the camera and power supply properly assembled. Also, repeat test with and without available approved accessories/cables/connectors.

Plug the AC line cord directly into a 120V AC outlet (do not use an isolation transformer for this check). Use a Leakage Current Tester or a metering system which complies with American National Standards Institute (ANSI C101.1 "Leakage Current for Appliances") and Underwriters Laboratories (UL) 1410 (50.7). Measure for current with the AC switch "on" and repeat with the AC switch "off" from all exposed metal parts of the cabinet (cable connections, handle bracket, metal cabinet, screwheads,metal overlays, control shafts, etc) to a known earth ground (waterpipe, conduit, etc.), particularly, any exposed metal part having a return path to the chassis. Any current measured must not exceed 0.5 milliamp. Reverse plug in the AC outlet and repeat test. ANY MEASUREMENTS NOT WITHIN THE LIMITS OUTLINED ABOVE ARE INDICATIVE OF A POTENTIAL SHOCK HAZARD AND CORRECTIVE ACTION MUST BE TAKEN BEFORE RETURNING THE INSTRUMENT TO THE CUSTOMER.

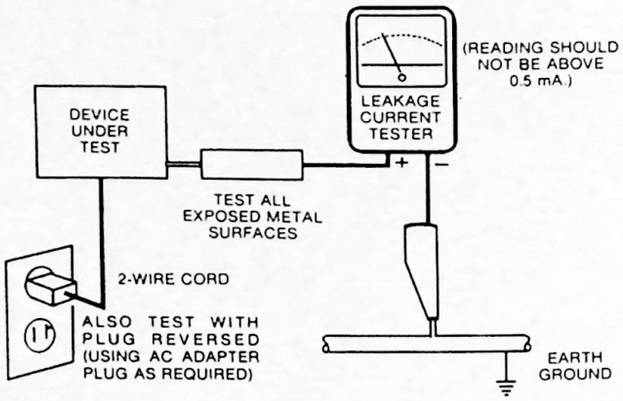

AC Leakage Test

AC Leakage Test

Avoid shock hazards. Do not connect this camera to a TV set, VCR or accessory that exhibits excessive leakage currents. If available, the VCR or television instrument to which this camera is connected should have the cold check and the leakage current hot check performed.

Product Safety Notice

Many ectrical and mechanical parts have special safety related characteristics. These characteristics are often not evident from visual inspection nor can the protection afforded by them necessarily be obtained by using replacement components rated for higher voltage, wattage, etc. Replacement parts which have these special safety characteristics are identified in this Data and its Supplements and Bulletins. Electrical components having such features are identified by shading on the schematics and by (★) on the parts list in this Data and its Supplements and Bulletins. The use of a substitute replacement which does not have the same safety characteristics as the recommended replacement part shown in the parts list in this Data and its Supplements and Bulletins may create shock, fire or other hazards. Product Safety is continuously under review and new instructions are issued from time to time. For the latest information always consult the current RCA Service Data. Supplements and Bulletins. A subscription to, or additional copies of, RCA Service Data may be obtained at a nominal charge from your RCA Consumer Electronics Distributor or from RCA Technical Publications, 600 North Sherman Drive, Indianapolis, Indiana 46201.

GENERAL DESCRIPTION

The BW001 Video Camera uses a vidicon pick-up tube and video amplifier system to generate 1.0V p-p negative-sync video signal into a 75-ohm load. Various operating voltages are supplied to grids G1 through G6 of the vidicon tube, and various signals such as horizontal and vertical blanking (to eliminate retrace lines) and horizontal and vertical sync are required.

Vidicon video signal output applied is to video amplifier IC101 through a FET(TR101) that affords high input impedance and voltage gain (about 92dB) as an output. The high-frequency portion of the amplified output signal is corrected by a high peaker network consisting of VR-101 and C112, and clamped by a clamp circuit using TR103. This stage also adds the composite blanking pulse. Signal is then applied to white-clipper stage TR103 that clips off extremely high (bright) video signal rising above a threshold level. H and V sync is added to the clamped and white-clipped video signal by diodes D205 and D206, and through resistors R119 and R120. At this point the composite video signal is sent to the video output jack via the coaxial cable in the camera-cable assembly.

A sample of the output video signal (emitter of TR104) is applied to the ALC (Automatic Light Control) circuit contained in IC102 to generate a DC voltage corresponding to the average video signal level. This voltage is fed back to the vidicon target electrode. When the video signal goes high (bright scene), the DC voltage from the ALC circuit decreases and lowers the target voltage, causing the video signal level to decrease.

The high voltage supplies for the vidicon are generated by a pulse produced from a frequency division of the horizontal-blanking pulse. Therefore, in the event of vertical deflection failure when the +12V camera power source and horizontal drive are supplied, there is a danger of the vidicon being burned. To prevent this, a target protection circuit consisting of TR304 and D202 is provided. Horizontal drive failure will cause loss of vidicon DC voltages. Thus, the system is self protecting with this failure mode.

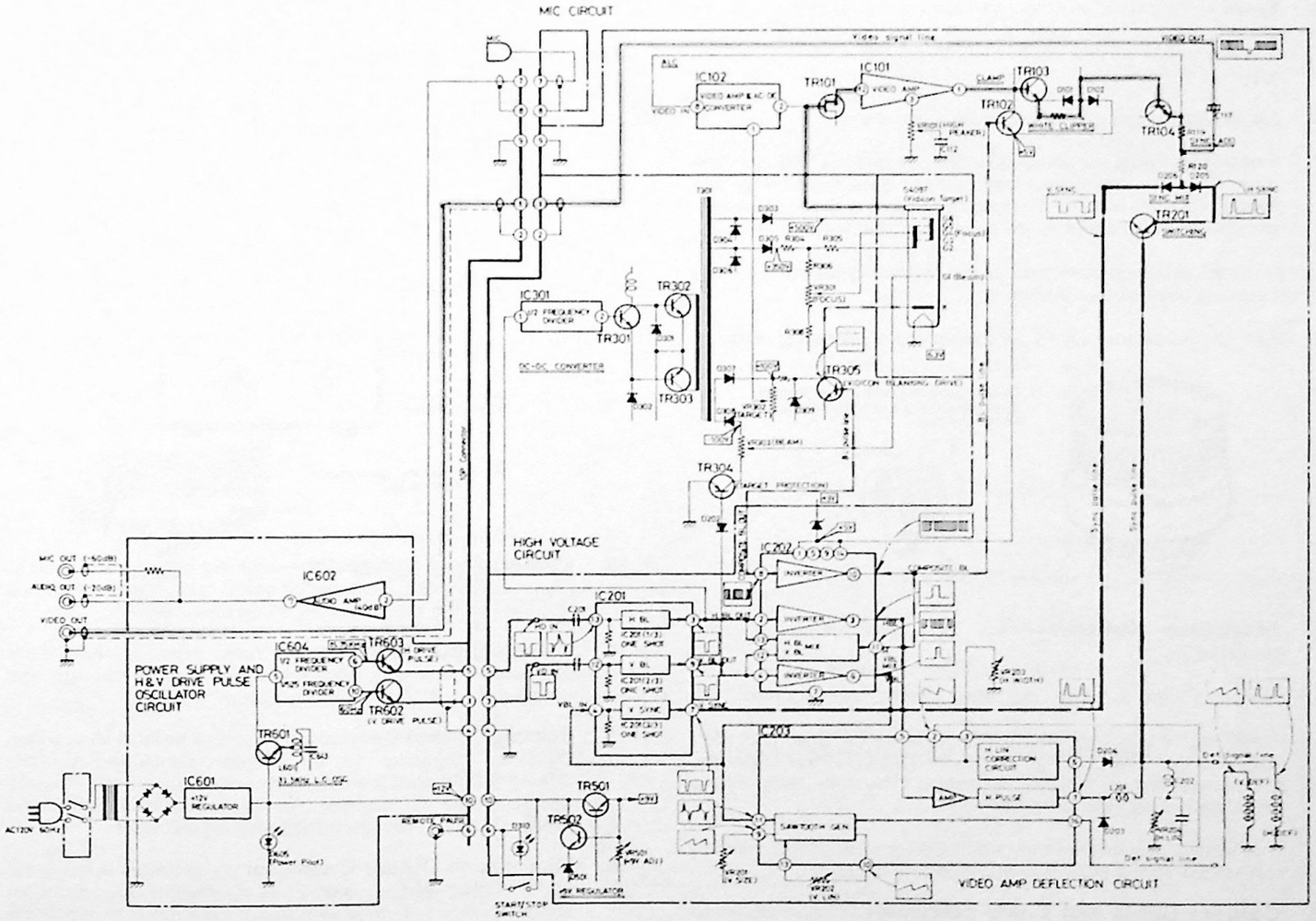

Block Diagram

MAJOR OPERATING COMPONENTS

1. **Optical View finder** — similar to that used on ordinary film cameras.

   The image area seen by the camera lens (field of view) is slightly greater than that of the view finder. So, to see exactly what the recorded picture will look like, use TV as monitor during recording.

2. **Tally lamp** — when used in conjunction with an RCA VHS Video Cassette Recorder, the tally lamp signals the camera operator when a recording is actually being made. When the lamp is "on," it means that the VCR is running and making a recording. When the lamp is "off," the recorder is in "stand-by" or "pause" mode.

3. **Microphone** — built-in microphone is most sensitive to sounds coming from the direction in which the camera lens is facing.

4. **Wind Screen** — is supplied to block out wind or breath noise. It simply attaches over the microphone.

5. **Lens** — Standard "C" mount F1.6-16 mm lens images the incoming light onto the vidicon tube. Lens screws into and out of the camera body to allow cleaning of the lens and vidicon tube.

6. **Lens Cap** — fits over the lens for protection.

7. **Focusing Ring** — allows operator to change focus of the lens. Focusing the lens of the camera does not change the focus of the viewfinder. To be sure subject is in focus, operator can perform either of the following checks:

   Estimate distance from the camera to the subject and set the focusing ring for this distance.

   Monitor the picture on TV as the recording is being made.

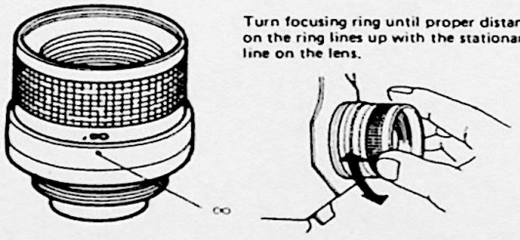

8. **Start/Stop Switch** — (For RCA VHS video cassette recorder only).

   Switch is used to "start" or "stop" (pause) the recorder.

   Press the PLAY and RECORD buttons on the recorder. Squeeze the START/STOP switch on camera once to pause; squeeze again to resume recording. The tally lamp lights when recording is in progress.

   This switch is operative only when the remote control cable is connected to the RCA Video Cassette Recorder.

9. **Camera Cable and Cable connector** — connected to the Camera input connector (13) on the power supply unit.

   This cable must be connected for the camera to operate, because it carries power to the camera, and video signal from the camera to the power supply. Video signal from the power supply is then supplied to the video tape recorder.

10. **Pistol Grip** — handle by which the camera should always be held. It has a mounting hole on the bottom so that the camera may be attached to a tripod.

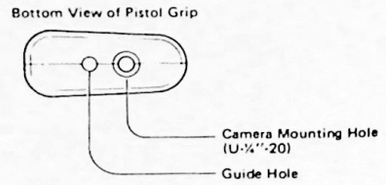

11. **Switch** — push/push type switch that turns the power supply "on" and "off."

12. **Power Indicator** — "on" whenever the power supply is turned "on."

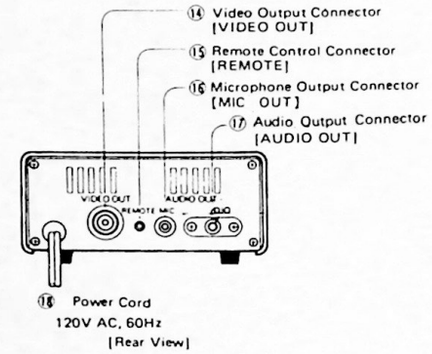

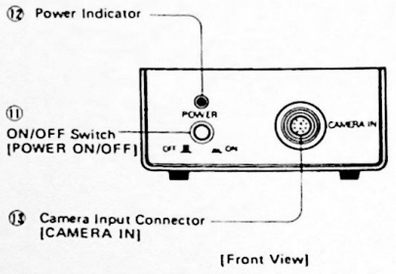

13. **Camera Input Connector** — camera cable is attached to power supplyhere. Be sure the cable connector is attached securely to the power supply input connector.

14. **Video Output Connector** — video signal (picture) from the camera emerges from the power supply through this connector — RCA type "phono plug."

15. **Remote Control Connector** — allows an RCA VHS Video Cassette Recorder to be remote controlled by the START/STOP switch on the camera. Connect the Remote Control Cable "C" (provided) to this connector. Connect the other end to the remote pause jack on the VCR.

16. **Microphone Output Connector** — provides a low-level audio output, and is usually not needed. If your recorder provides only a microphone input, connect a microphone cable (not supplied) between the Microphone Output Connector and the microphone input on the recorder. One end of the cable should have a 1/8" miniature phone plug to fit the microphone connector on the power supply. The other end should have a connector plug to match input of recorder. Use shielded audio cable only.

MAJOR OPERATING COMPONENTS (Continued)

17. **Line Output Connector** — provides a line level, amplified audio output. Connect one end of the Audio cable "B" (provided) to this connector, and connect the other end to the audio input connector on the recorder.
    Note: With 2 audio connectors available, (LINE) and (MIC), it is possible to record the sound portion of any recording session on a second video or audio recorder. Just connect the microphone output connector, with a microphone cable (not supplied) to the microphone input connector of the other recorder. Do not try to connect both the microphone and audio (line output) cable to the same recorder.

18. **Power Cord** — connect to 120V AC power source.

CABLES (Supplied)

Ⓐ Video Cable (Stock No. 144628)

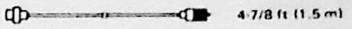

Ⓑ Audio Cable (Stock No. 144630)



Ⓒ Remote Control Cable (Stock No. 144629)*

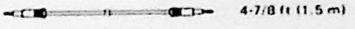

• **CAMERA**

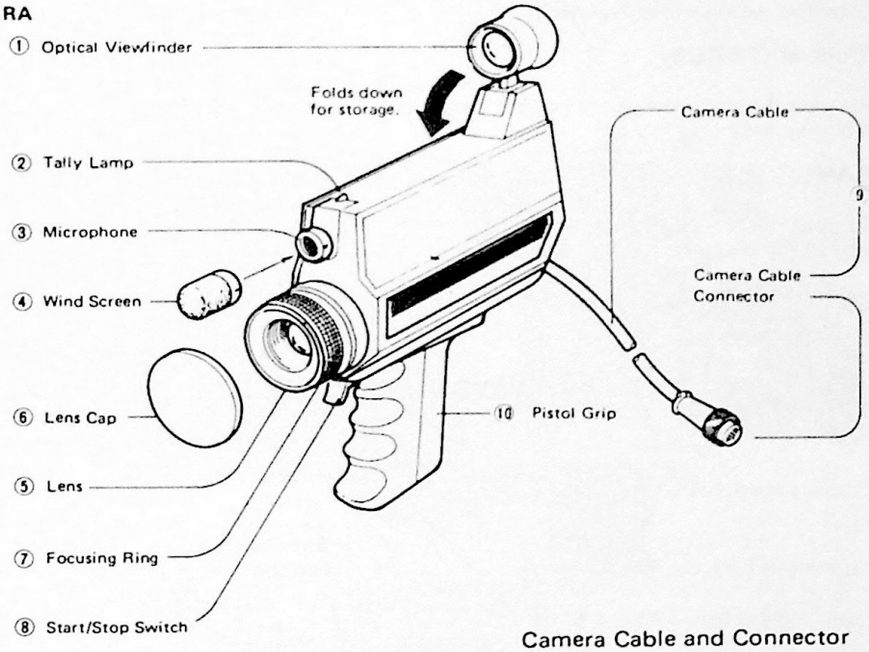

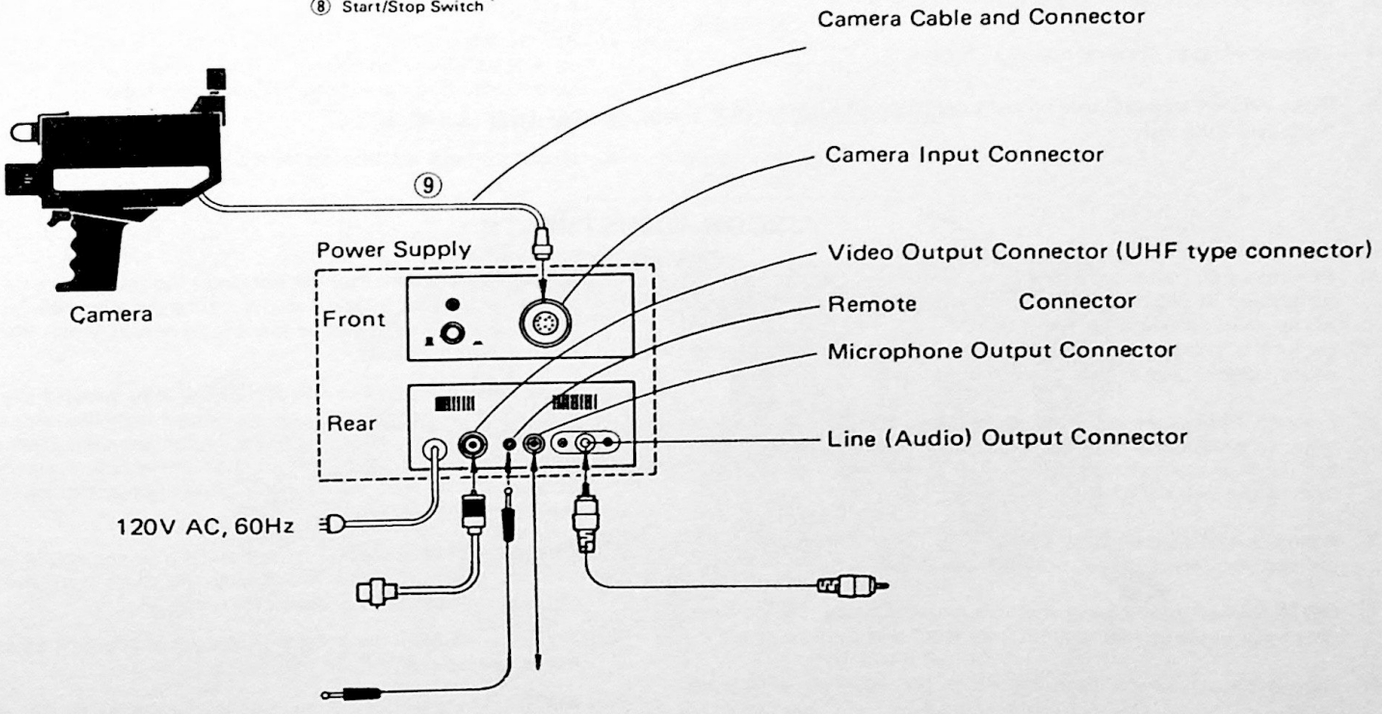

Video Camera and Power Supply

SERVICE ADJUSTMENTS

Test Equipment

Video Monitor (Resolution: More than 700 lines)
Oscilloscope (Bandwidth: More than 5 MHz)
DC Electronic Voltmeter
Standard Test Pattern
Light Meter

Preliminary

Connect Video Camera, Power Supply and Video Monitor as shown in Figure 3. Video Camera and Video Monitor should be allowed to warm up for 60 seconds, before proceeding with any adjustments.

Remove one Screw and pull back viewfinder to gain access to target, beam, focus controls as shown in Figures 5.

Electrical Focus Control (FOCUS)

Turn Focus control on circuit board slowly until picture displayed on monitor is sharpest (Figure 5).

Beam Control (BEAM)

1. Turn the Beam Control (VR303) clockwise as viewed from the copper pattern side of the board so that only a blank raster remains.
2. Turn the Beam Control (VR303) slowly in a counterclockwise direction until highlights in the picture appear normal. Then very slightly advance control in the same direction.

Target Control (TARGET)

First adjust Beam control. Then turn Target control on circuit board slowly in a clockwise direction until picture just disappears, or until the control has reached the end of rotation. Then slowly turn counterclockwise until picture just appears and details in the white areas are resolved clearly (Figure 5).

Regulated +9V DC.

Adjust VR501 for regulated +9 volts, measured at pin one (1) of circuit board connector (Figure 4).

Deflection Size

Observe Video Monitor, adjust VR204 Horiz. - Linearity, VR202 Vert. - Linearity, VR203 Horiz. - Width, VR201 Vert.-Size (Figure 4) controls for best test pattern circle. Maintain distance between camera and test pattern at one foot, ten inches (55cm). At this distance, four wedges of the test pattern should be visible on the monitor screen.

High Peaker

While observing the test pattern image, adjust High Peaker (VR101) to minimize overshoots following black areas which appear as white streaks (Figure 4).

NOTE: Overcorrection of the High Peaker will reduce picture resulation.

VIDICON REPLACEMENT

Removal Procedure

1. Remove camera covers (See Steps 1 through 4 under Camera Disassembly).
2. Remove lens by turning it fully counterclockwise.
3. Disconnect vidicon tube socket — Figure 5.
4. Loosen vidicon retainer screw — Figure 5.
5. Push vidicon forward until end of tube protrudes from unit and then pull tube out.

Installation Procedure

NOTE: Use care to handle vidicon tube with a cloth or gloves to prevent the surface of the vidicon from being marred by any contaminant on the fingers. In the event that finger prints or other contaminates are present on the tube it should be cleaned with alcohol and a soft cloth before installation.

1. Insert vidicon from front of camera and push it completely back until it stops.
2. Adjust the position of the vidicon tube with respect to the socket as shown in Figure 1. Then tighten vidicon retaining screw until it is barely snug against the tube.
3. Connect vidicon socket.
4. Install camera len and replace cover.

VIDICON ADJUSTMENTS

1. Position test pattern chart, video camera, and video monitor as shown in Figure 3. Apply power to camera and monitor; allow units to warm up for approximately two minutes. If no picture is produced, alternately turn target and beam adjustment control (see Figure 5) until a picture is obtained.
2. Loosen deflection yoke retainer screw and turn deflection yoke to produce a "level" picture on the screen or the monitor. Tighten deflection yoke retainer screw when correct picture is obtained (Figure 5).
3. Adjust focus ring on lens to point .5m. Turn Flangeback Adjusting Ring to obtain optimum focus. (Figure 5)

   NOTE: When performing this adjustment place the camera one foot, eight inches (0.5m) away from test pattern chart.
4. Adjust focus control (see Figure 5) for optimum electrical focus.

   NOTE: In the event that the center of the image moves as the focus control is turned, adjust centering magnets until no movement of the center of the image occurs when the focus control is adjusted.
5. Adjust beam control to blank the image by turning the beam adjustment control clockwise as viewed from the copper side of the board so that only a blank raster remains. Then adjust the control counterclockwise until an image appears. The control should then be turned slightly counterclockwise from this point. Figure 5.

   Check for proper setting by shooting a bright scene without extreme contrast. If the image appears white, turn the beam control slightly more counterclockwise.
6. Adjust video level for .7V p-p as shown in Figure 1 by turning the target adjust control — see Figure 5.

   NOTE: When target adjustment is complete, repeat adjustments 4 thru 6 for best picture.

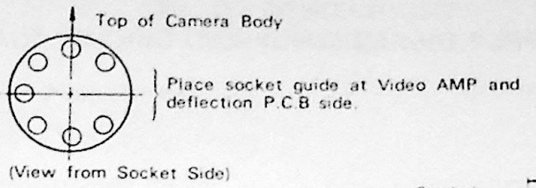

Figure 1

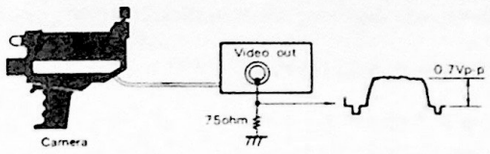

Figure 2

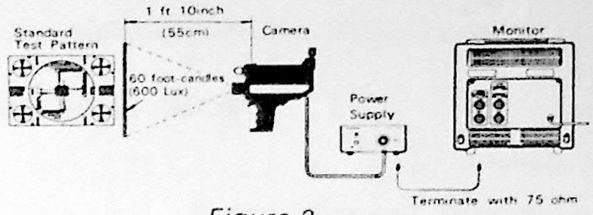

Figure 3

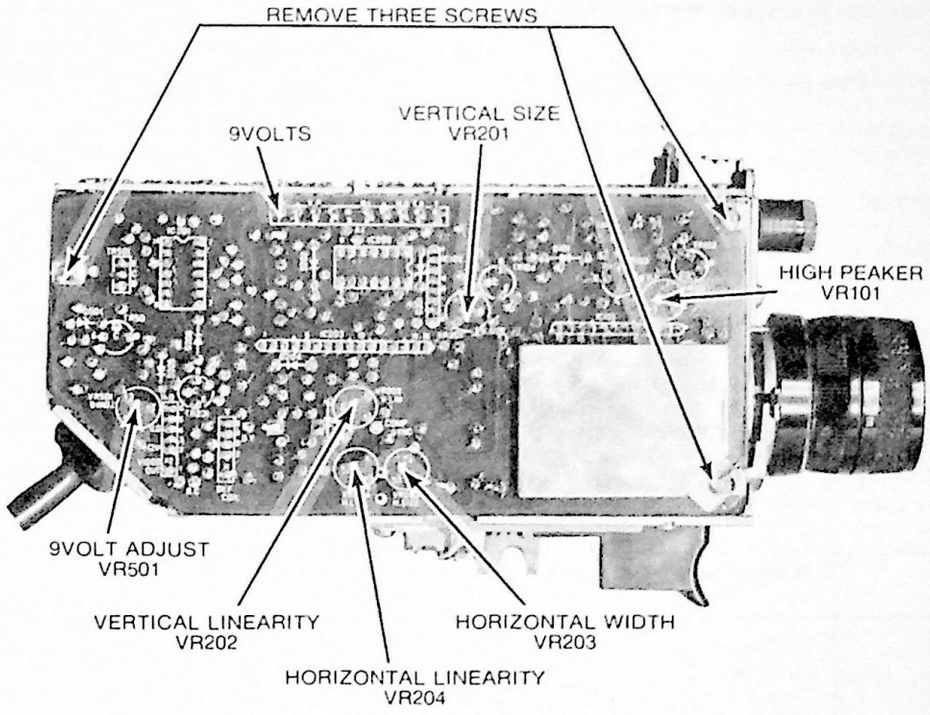

Video Amp. and Deflection Circuit Board Figure 4

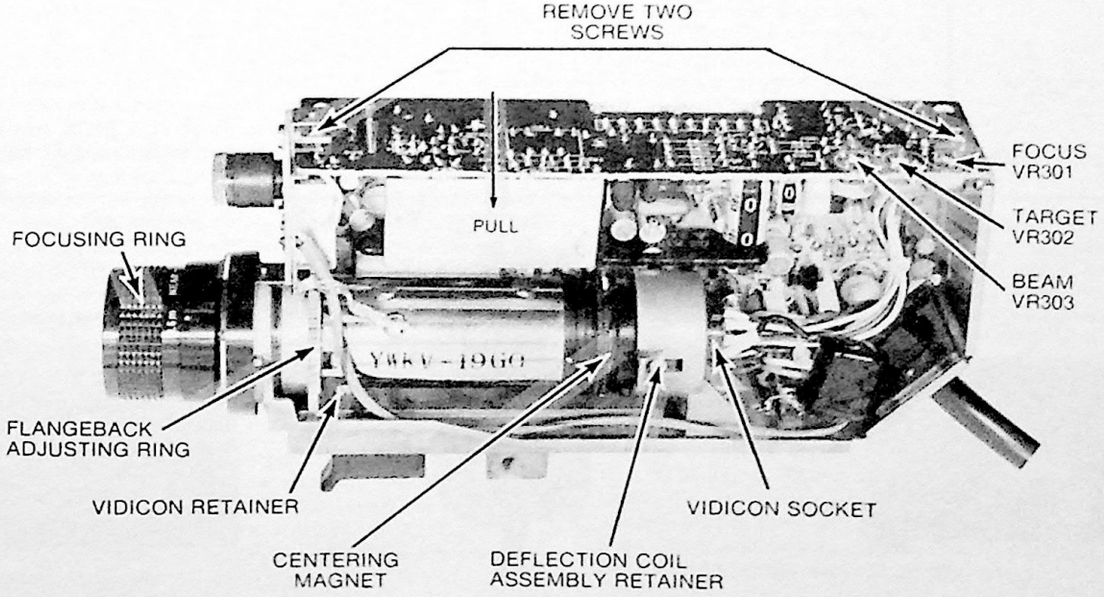

High Voltage Circuit Board Figure 5

POWER SUPPLY DISASSEMBLY AND CIRCUIT BOARD REMOVAL

Power Supply
Preliminary: Disconnect AC power cord.
Case removal:

1. Remove two screws and pull the case forward—(see figure 8).

Power Supply Circuit board removal:

1. Remove two screws and lift off circuit board as shown in Figure 6.

Power Switch Circuit Board Removal:

3. Remove four screws and lift off board — see Figure 10.

CAMERA DISASSEMBLY AND CIRCUIT BOARD REMOVAL

Camera

Preliminary: **Turn power switch off.**

1. Remove one screw and then viewfinder by pulling unit back — Figure 9.
2. Remove two screws from pistol grip — Figure 9.
3. Remove one screw and remove microphone cover by pulling it forward — Figure 9.
4. Remove right and left side camera covers.

For reassembly, reverse the above steps.

Circuit Board Removal

1. High Voltage board: remove two screws and connector attached to Video Amplifier and Deflection board by pulling the high voltage circuit board in the direction of the arrow — Figure 5.
2. Video Amplifier Circuit board: remove three screws and disconnect circuit board connector and two other connectors as illustrated in Figure 4.

   NOTE: Exercise care to not cut vidicon target lead when disassembling circuit boards.
3. Mic Circuit board: remove two screws as illustrated in Figure 7.
4. VCR Start/Stop switch: remove three screws as illustrated in Figure 11.

SERVICE CHECK CHART

The BW001 video camera utilizes a separate power supply which is connected to the camera via the cable assembly. Therefore, as a first step in servicing and prior to the use of the following chart the technician should confirm that the power supply is providing proper DC voltages and signals as illustrated at the right.

In all instances, the chart assumes that power supply conditions are correct.

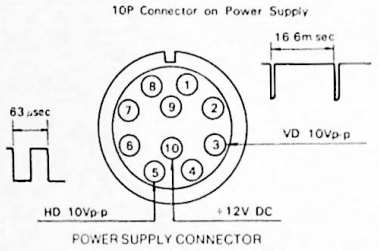

Symptom	Points to Check and Adjustments	
No picture (No Video Signal)	1. Adjust vidicon beam current(VR 303). 2. If beam current is correct, check +9 volt power source. 3. Check vidicon pin voltages. 4. Check to see that vidicon is properly mounted and socket is engaged. 5. If the above conditions are confirmed, check vidicon filament voltage. 6. Check composite blanking signal (terminal 11 of IC 202). If horizontal blanking is not present, high voltage circuit will not operate. If vertical blanking is not present, the vidicon is driven to cutoff.	7. If horizontal and vertical blanking signals are normal, check voltage at vidicon grid one (pin 1). If voltage at G1 is 100V, suspect problem in target protection circuit such as defective TR 304. 8. Check horizontal and vertical deflection drive signals. 9. Touch vidicon target lead with finger to see if noise appears on the monitor screen. If noise appears, the video amplifier circuitry such as TR 101 and IC 101 are probably operative. If video amplifier is assumed operative, disconnect one side of R124 and check to see if an image appears. If an image appears, suspect problems in the video ALC circuit.

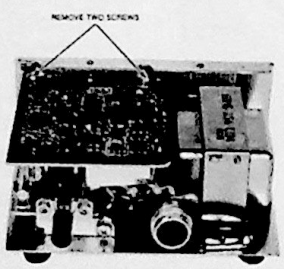

Figure 6

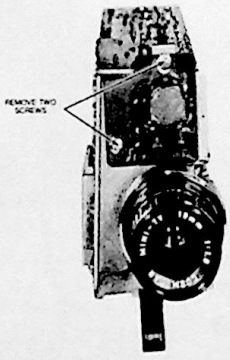

Figure 7



Figure 8

CIRCUIT DESCRIPTION
(Continued)

When the electron beam current from the cathode of the tube decreases, the currents through the G2 electrode diminishes and the voltage at the junction of R304 and R305 drops thereby raising the voltage at point A (G2 grid voltage).

If the voltage at G2 increases, more beam current is drawn, and the voltage at point A will swing in such a direction as to make the focus electrode voltage stabilize. (VR 301 is focus control).

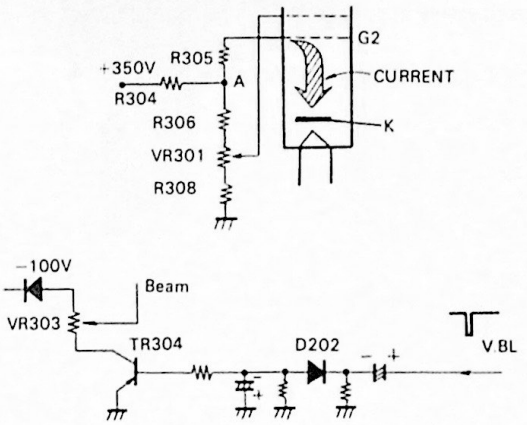

Figure 15

10. Target Protection Circuit

BW001 camera includes target protection circuitry to prevent the vidicon tube from burning an image in the event that vertical drive or horizontal drive are lost.

When the horizontal drive signal is not supplied, protection results from the fact that the vidicon electrode voltages (supplied from DC convertor circuit) are not generated. Protection against loss of vertical deflection is afforded by means of the target protection circuit shown in Figure 15. When the camera is operating normally, a vertical blanking pulse is applied to the cathode of rectifier diode D202 which produces after filtering a negative bias on the base PNP transistor TR 304 which assures that the device is held into saturation. Notice that the ground end of the beam current control is returned to ground via the collector circuit of TR 304. Under these conditions, the nominal beam voltage is applied to the vidicon as determined by the setting of VR 303. In the event the vertical deflection is lost, base bias for transistor TR 304 is no longer present and the device goes to cut-off. Under these conditions, the full −100 volts is made available to the G2 electrode of the vidicon and the electron beam is cut off.

11. Vidicon Blanking Drive Circuit

It is desirable to blank the electron beam during horizontal and vertical retrace time. Therefore, a composite blanking pulse supplied from pin 8 of IC 202 is applied to the base of transistor TR 305. The output of TR 305 provides a positive horizontal and vertical blanking voltage sufficient to cutoff the vidicon beam. Diode D309 is a zener diode that clamps the blanking pulse to a maximum of 25 volts.

12. Video Signal Clamp Circuit

The collector of clamp transistor TR 102 shunts the video signal path. The emitter of this stage is maintained at +5 volts and the base of the device is supplied with the composite blanking pulse from pin 10 of IC 202. During the horizontal and vertical blanking intervals, the blanking pulse supplied to the base of transistor TR 102 causes the device to saturate and clamp the blanking interval of the signal to the +5 volt black level.

13. White Clipper Circuit (Figure 16,17)

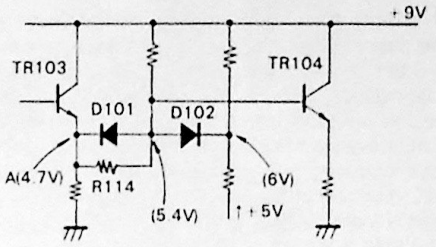

Figure 16

The white clipper circuit is supplied with video from the emitter of transistor TR 103 (Figure 16). Whenever the video signal is below the clipping level, diode D101 is conducting and diode D102 is cutoff. In the event of a high level (bright) video signal, the signal voltage at point "A" becomes high enough to reverse bias diode D101. Under these conditions, forward bias is applied to diode D102 and the signal voltage appearing at the anode of diode D102 is essentially clamped to the 6-volt point where the cathode of this device is returned. The circuit configuration is such that the video white level is clipped at 1 volt.

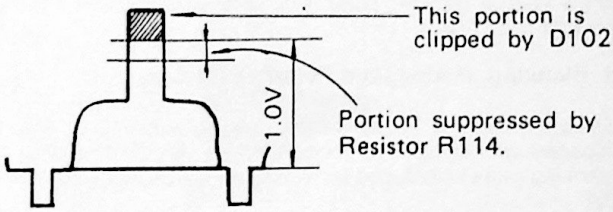

Figure 17

14. High Peaker Circuit

The high peaker circuit is composed of control VR 101 and C112. These components comprise a frequency selective network which allows the video signal to be adjusted for flat 4-MHz response.

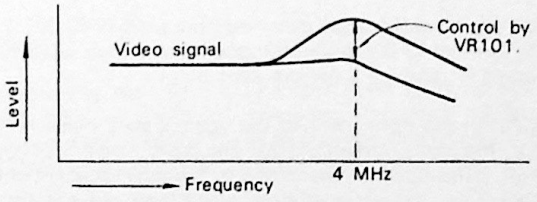

15. ALC (Automatic Light Control) Circuit (Schematic Page 17)

Video signal from the emitter of transistor TR 104 is supplied to pin 8 of IC 102 whereupon the signal is amplified by a transistor stage located inside the integrated circuit. The output of this amplifier (transistor T1) is rectified by diodes D1 and D2.

If the input video signal becomes excessively high, the DC voltage supplied to the base of transistor T2 becomes correspondingly high. Under these conditions, the device output (collector voltage) decreases. This output voltage serves to modify the vidicon target voltage which causes a decrease in the output level of the video signal. Resistors R122, R123, R124, and capacitors C122 and C123 are used to integrate the change in the transistor T2 collector voltage which modifies the vidicon tube voltage. In the event of a malfunction in this circuit, a change in the video signal will be fed back to the target of the vidicon causing loss of stability and circuit oscillation.

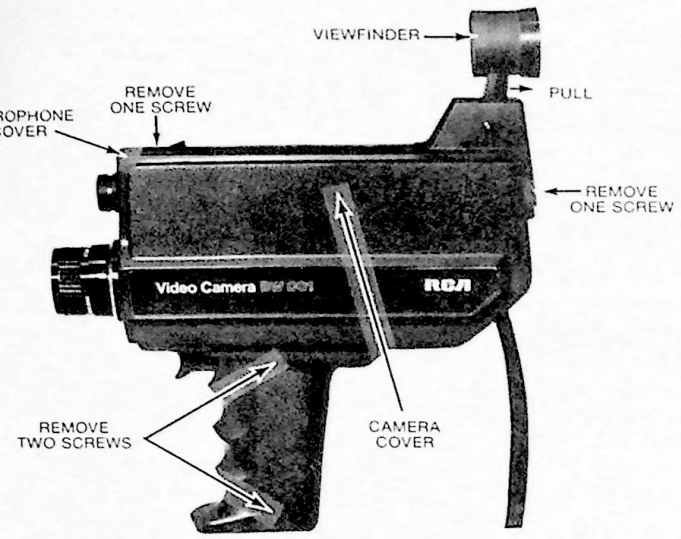

Figure 9

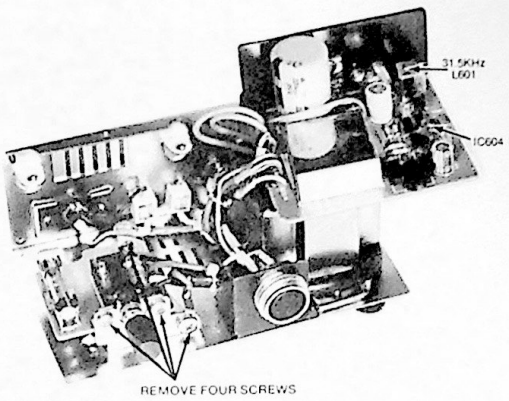

Figure 10

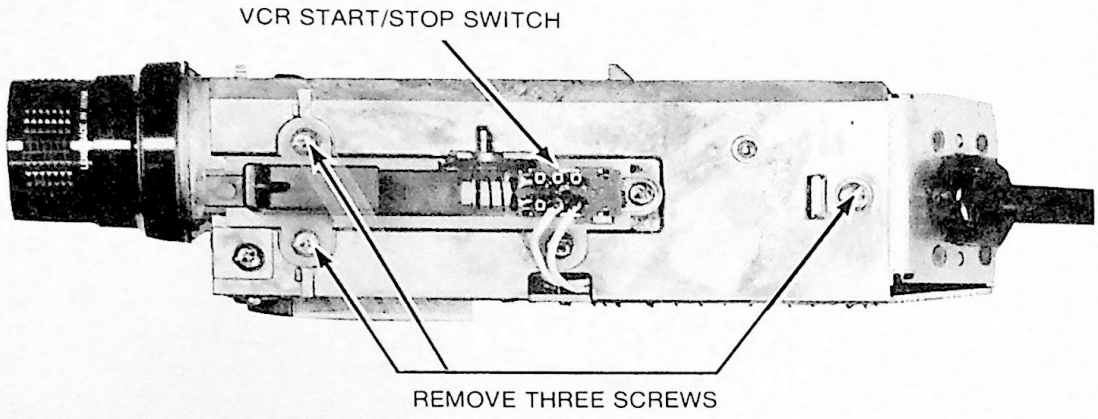

Figure 11

CIRCUIT DESCRIPTION

Power Supply

1. **+12 Volt Regulator Circuit**
The BW001 power supply utilizes an integrated circuit(IC 601) as an overcurrent protected 12-volt regulator stage. When servicing, it is well to remember that the power indicator LED (Light Emitting Diode) is powered from this 12-volt source. In the event that the power indicator LED does not light or is not bright enough, it is indicative of problems in the +12-volt regulated supply.

2. **Horizontal and Vertical Drive Pulse Circuit**
Transistor TR 601, C613, and L601 comprise the LC master oscillator circuit. This oscillator generates a frequency of 31.5 kHz. This signal is divided by two and by 525 via counters contained in IC 604. The 15.75-kHz horizontal drive pulse is buffered by emitter follower transistor TR 603 this signal is then sent to the camera via pin 5 of the power cable socket. In a similar way, the 60-Hz output of IC 604 is buffered by transistor TR 602 whose output is applied to pin 3 of the power connector.

3. **Audio Amplifier Circuit**
This circuit amplifies the audio signal (-60 dBm) supplied by the condensor microphone which is an integral part of the camera. IC 602 amplifies this signal to provide a line output of -20 dBm and a mic output of - 60 dBM. To improve the quality of the audio signal supplied from the microphone, a low-pass filter rejects any high frequency signal such as horizontal deflection pick up (15.75 kHz) and low frequency signals below approximately 60 Hz. These filters consist of capacitors C604, C605, C606 and resistors R605, R606, R607, R608, and R609.

Camera

1. **+9V Regulator Circuit**

The regulated +12 volt from the power supply section is applied to the +9-volt regulator circuit to provide a stable 9-volt source for the camera circuitry. Transistor TR 501 serves as the regulator transistor. Transistor TR 502 and 6.8-volt zener diode D501 serve as a regulator driver stage which can be adjusted via VR 501 to produce a constant 9-volt camera supply voltage.

2. **VCR Start/Stop Control**
When the start/stop switch (located in the camera hand grip) is "on," the +12 volts from the power supply is applied to pin 6 of the 10 pin connector that supplies power and drive signals to the camera. This 12-volt voltage is supplied to the VCR via the remote pause jack located on the rear of the unit. When the +12 volts is present, the VCR begins operation. Also, when the start/stop switch is "on," the tally lamp (D310) located on the upper front portion of the video camera is illuminated showing that a recording is being made.

CIRCUIT DESCRIPTION
(Continued)

3. Horizontal Blanking (H-BL) and Vertical Blanking (V-BL)

The power supply generated HD (horizontal-drive) pulse produced in the power supply section is applied to terminal 13 of IC 201 via pin 5 of the 10 pin connector. IC 201 includes three sections consisting of one-shot multivibrators. The HD pulse is differentiated by resistors within IC 201 and an external capacitor C201. This differentiated horizontal drive pulse is used to trigger the horizontal blanking pulse as shown in the illustration Figure 12. The H-BL (horizontal-blanking) pulse thus produced is available at terminal 3 of IC 201. The pulse width of this pulse is determined by the time constant of R201 and C202.

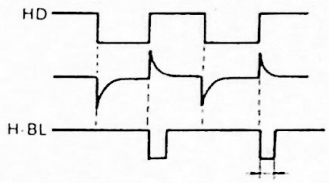

Figure 12

The V-BL (vertical-blanking) pulse is obtained in the same manner as the horizontal blanking pulse. In this case, the pulse width of the vertical blanking pulse is determined by the time constant of R204 and C204.

4. Blanking, Mixing, and Polarity Inversion

Since the cathode of the vidicon and the video signal must be supplied with composite horizontal and vertical blanking, the blanking pulses produced by IC 201 are mixed by circuitry in IC 202.

Furthermore, four "AND" gates are included in IC 202 which are used for mixing the horizontal and vertical blanking pulses to produce the composite blanking pulse. Also, this circuitry is used for polarity inversions of the horizontal blanking, vertical blanking, and composite blanking pulses.

5. Vertical Sync Generator Circuit

The positive blanking pulse obtained from pin 6 of IC 202 is supplied to pin 4 of IC 201 where it triggers a one-shot multivibrator that serves to produce a vertical sync pulse.

The width of the front porch of the vertical sync pulse is determined by the time constant of R207 and C205. And that of the vertical sync pulse itself is determined by the time constant of C206 and R208. Thus, a properly shaped vertical sync pulse is obtained at pin 7 of IC 202 (Figure 13).

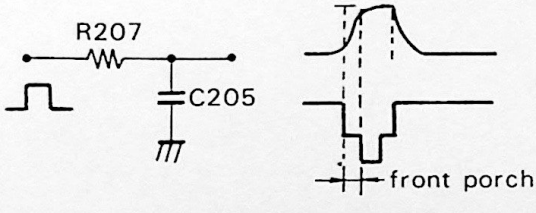

Figure 13

6. Horizontal Sync Generator and Horizontal Deflection Output Circuits

The positive horizontal blanking pulse obtained from pin 3 of IC 202 is supplied to pin 5 of IC 203 and amplified to produce a horizontal output signal at pin 7 of IC 203. Diode D203 serves as a damper diode.

Power for the horizontal deflection output circuitry is supplied to pin 6 of IC 203 through diode D204. This source voltage is adjustable by VR 203 to allow adjustment of the horizontal deflection signal amplitude and thus the scan width. The horizontal deflection output is differentiated by a circuit consisting of C219 and R216 and then drives a switching transistor (TR 201) to thereby obtain horizontal sync. Components L202 and VR 204 are used to produce a sawtooth current that is fed back to pin 2 of IC 203 to modulate the signal supplied from pin 6 of the same device. This feedback signal provides horizontal linearity correction.

7. Vertical Deflection Output Circuit

The positive vertical blanking signal supplied from pin 6 of IC 202 is applied to pin 11 of IC 203. Within the device, the vertical blanking signal is integrated by a resistor and an external capacitor (C208) to produce a vertical sawtooth waveform. VR 201 serves as a vertical height control.

The sawtooth signal obtained from pin 16 of IC 203 is then applied to the vertical coils of the vidicon deflection yoke. Also, a sample of this signal is fed back to pin 14 of IC 203 to provide linearity correction. The vertical linearity can be optimized by use of control VR 202.

8. DC/DC Convertor Circuit

The DC/DC convertor circuit generates +500V, +350V, +100V and −100V electrode voltages for the camera vidicon pickup tube. The circuit consists of a three transistor amplifier (TR 301, 302 and 303) that drives a step-up transformer with appropriate secondary windings. Drive signal for this amplifier is provided via a one-half frequency divider consisting of IC 301 which is driven from the horizontal blanking pulse supplied from pin 3 of IC 301.

The purpose of the one-half frequency division (7875 Hz) is to prevent switching noise generated by the convertor from entering the video signal during active scan time (Figure 14).

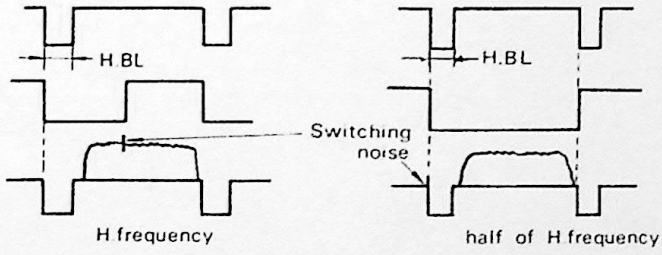

Figure 14

9. High Voltage Circuit

The high voltage circuit supplies the following voltages for the vidicon.

G 3,6:	Voltage for vidicon separate mesh — +500V
G 4:	Focus voltage ranging from +55 to +96V (+75V standard)
G 2,5:	+295V
G 1:	Beam voltage: 0 to −100V (−35V standard)
Target:	0 to +70V

Grid G2 is the vidicon beam accelerating grid. The G2 grid voltage determines the beam current supplied from the vidicon cathode. Over a long period of time, tube emission will tend to slump. The bias arrangement shown in Figure 15 provides a feedback network such that the focus electrode voltage and the G2 voltage will track when beam current control VR 301 is readjusted to provide increased beam current to compensate for the slump.

POWER SUPPLY EXPLODED VIEW

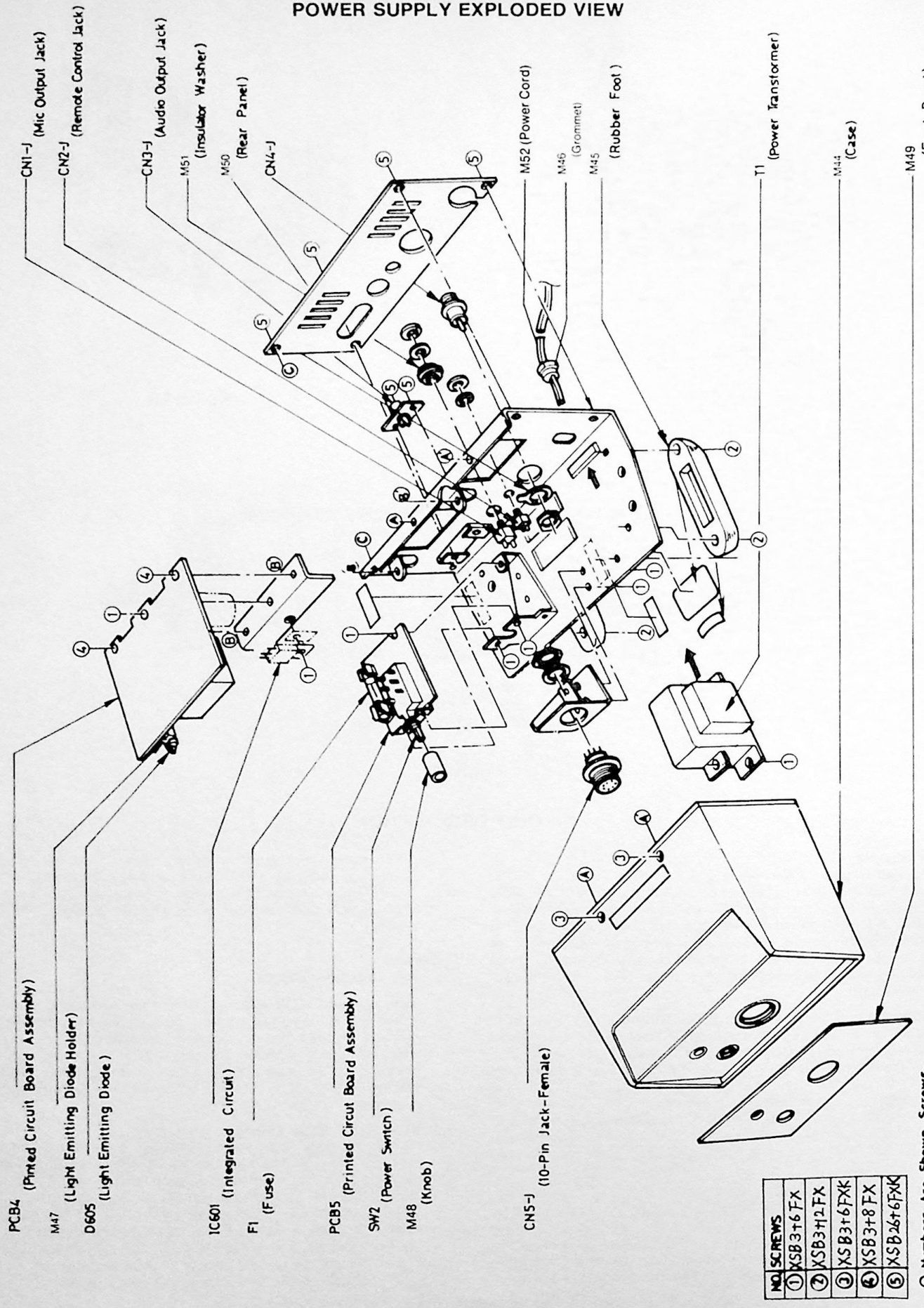

NO.	SCREWS
①	XSB3+6FX
②	XSB3+12FX
③	XSB3+6FXK
④	XSB3+8FX
⑤	XSB26+6FXK

○ Numbers Are Shown Screws.

HIGH VOLTAGE CIRCUIT BOARD

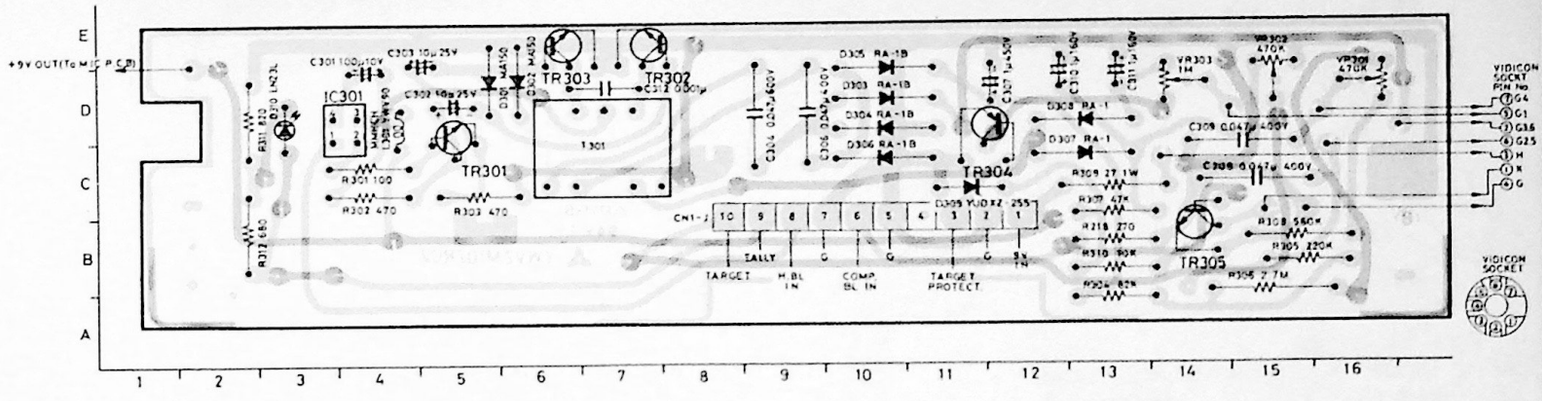

TR301	5 – D
TR302	7 – E
TR303	6 – E
TR304	11 – D
TR305	14 – B
IC301	4 – D
D301	5 – D
D302	6 – D
D303	10 – D
D304	10 – D
D305	10 – E
D306	10 – C
D307	13 – C
D308	13 – D
D309	11 – C
D310	3 – D

Video and Deflection Circuit Board

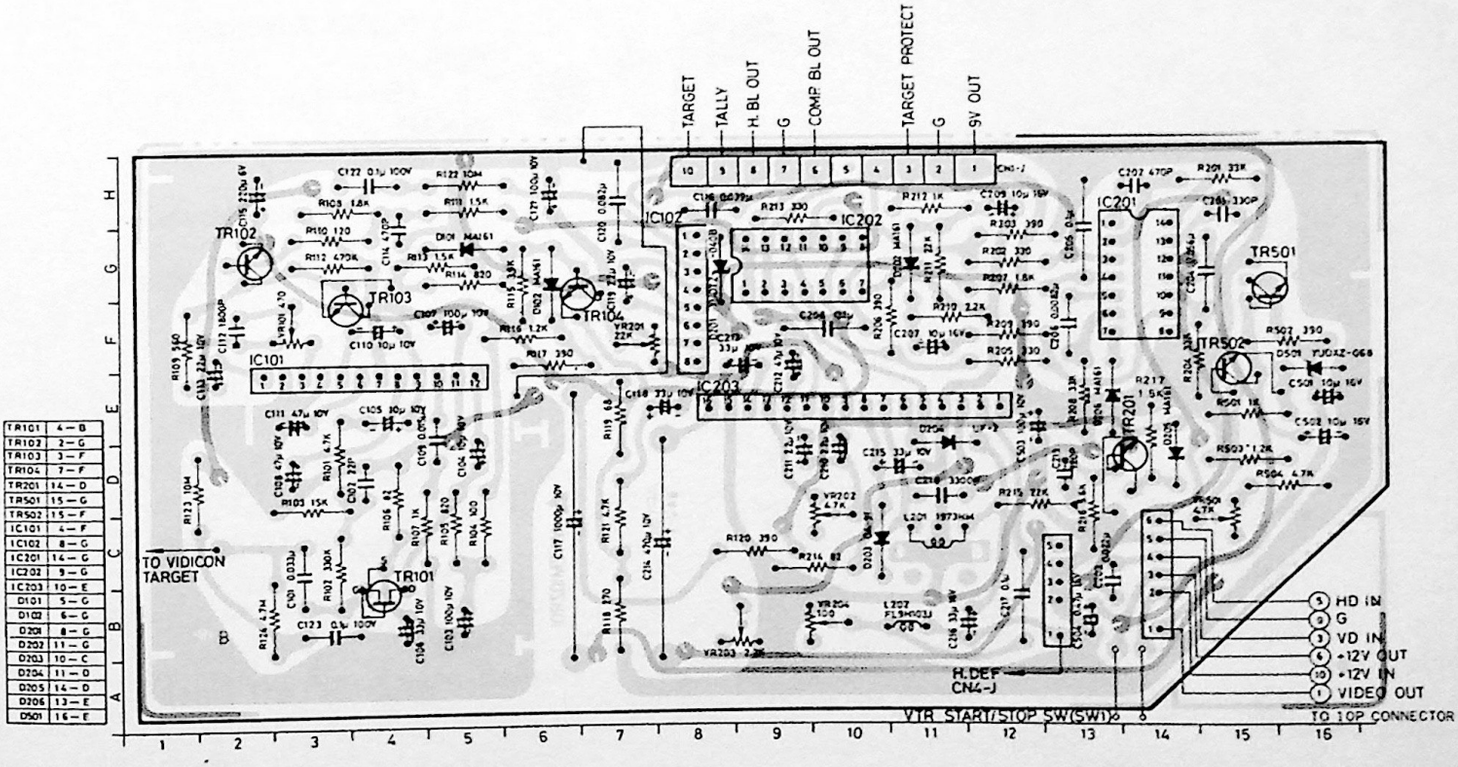

TR101	4 – B
TR102	2 – G
TR103	3 – F
TR104	7 – F
TR201	14 – D
TR501	15 – G
TR502	15 – F
IC101	4 – F
IC102	8 – G
IC201	14 – G
IC202	9 – G
IC203	10 – E
D101	5 – G
D102	6 – G
D201	8 – G
D202	11 – G
D203	10 – C
D204	11 – D
D205	14 – D
D206	13 – E
D501	16 – E

CAMERA EXPLODED VIEW

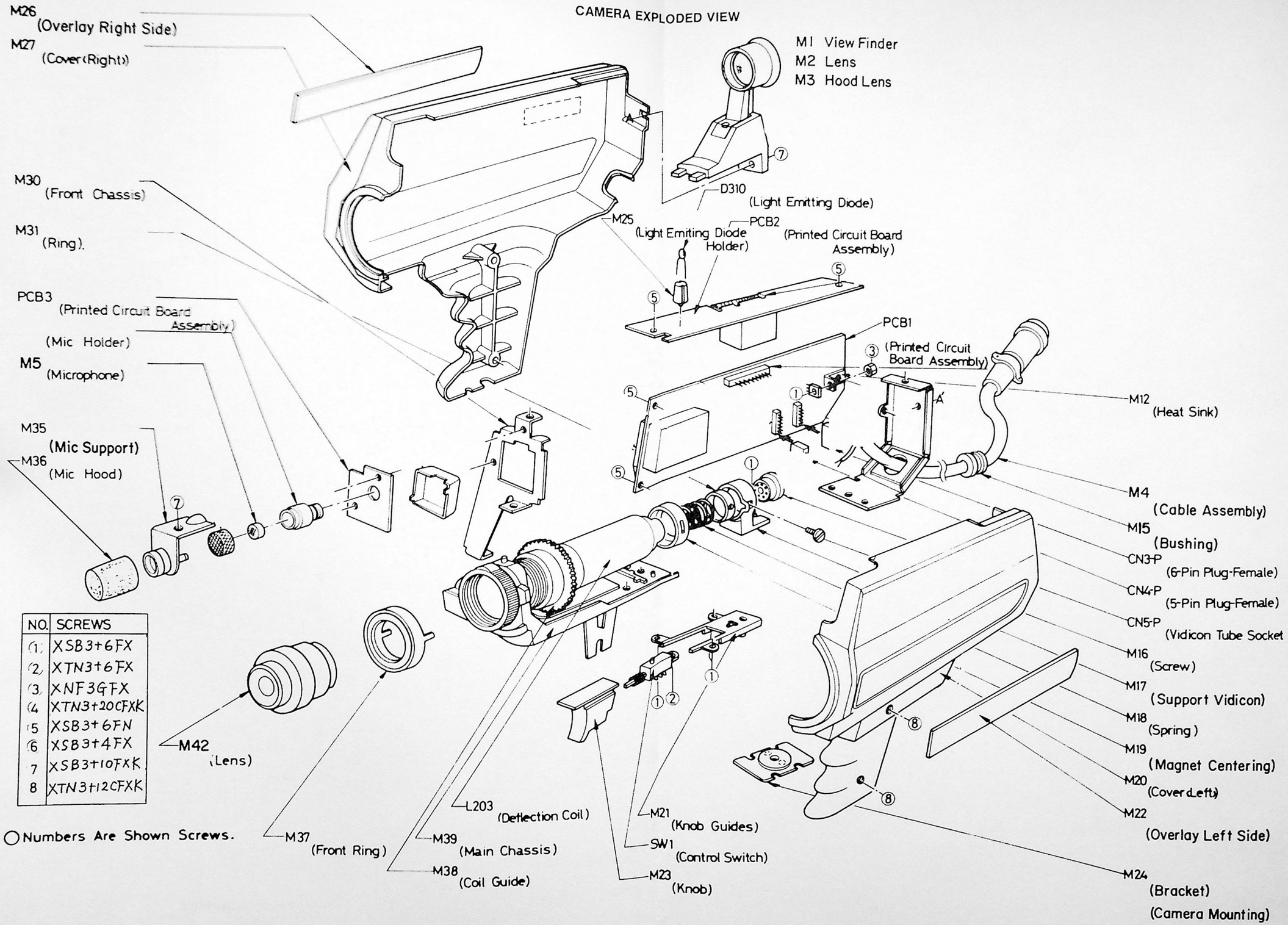

NO.	SCREWS
1	XSB3+6FX
2	XTN3+6FX
3	XNF3GFX
4	XTN3+20CFXK
5	XSB3+6FN
6	XSB3+4FX
7	XSB3+10FXK
8	XTN3+12CFXK

○ Numbers Are Shown Screws.

HIGH VOLTAGE CIRCUIT BOARD

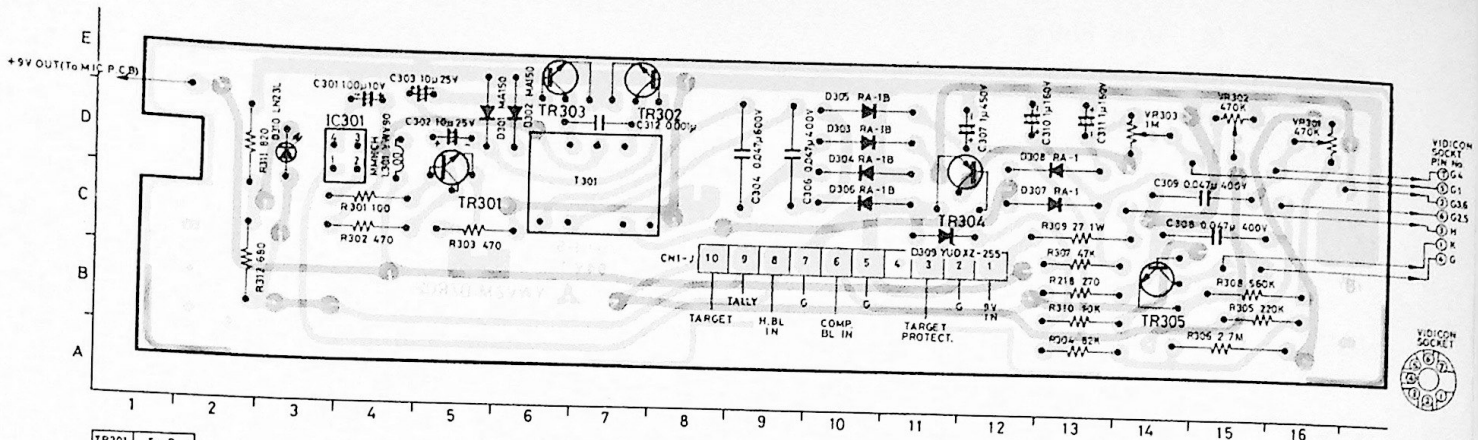

TR301	5 – D
TR302	7 – E
TR303	6 – E
TR304	11 – D
TR305	14 – B
IC301	4 – D
D301	5 – D
D302	6 – D
D303	10 – D
D304	10 – D
D305	10 – E
D306	10 – C
D307	13 – C
D308	13 – D
D309	11 – C
D310	3 – D

Video and Deflection Circuit Board

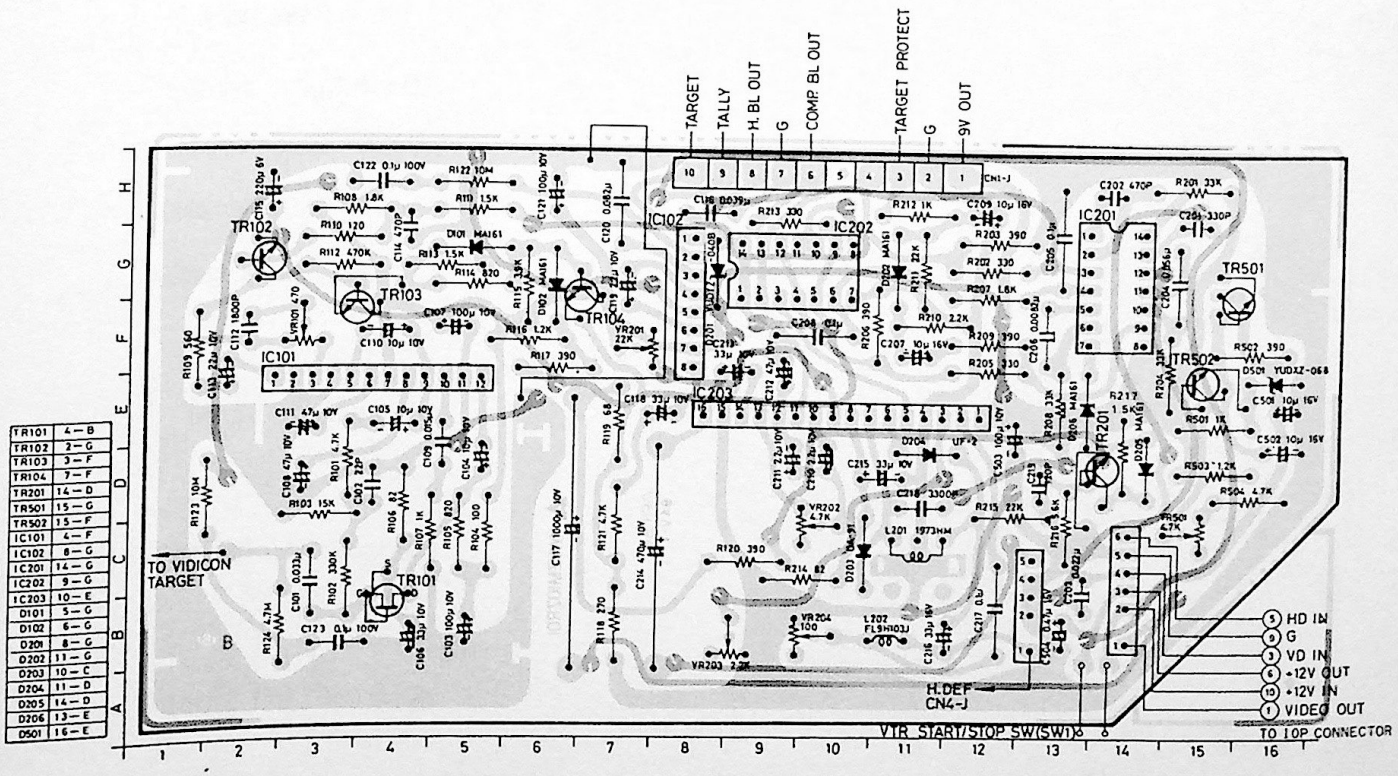

TR101	4 – B
TR102	2 – G
TR103	3 – F
TR104	7 – F
TR201	14 – D
TR501	15 – G
TR502	15 – F
IC101	4 – F
IC102	8 – G
IC201	14 – G
IC202	9 – G
IC203	10 – E
D101	5 – G
D102	6 – G
D201	8 – G
D202	11 – G
D203	10 – C
D204	11 – D
D205	14 – D
D206	13 – E
D501	16 – E

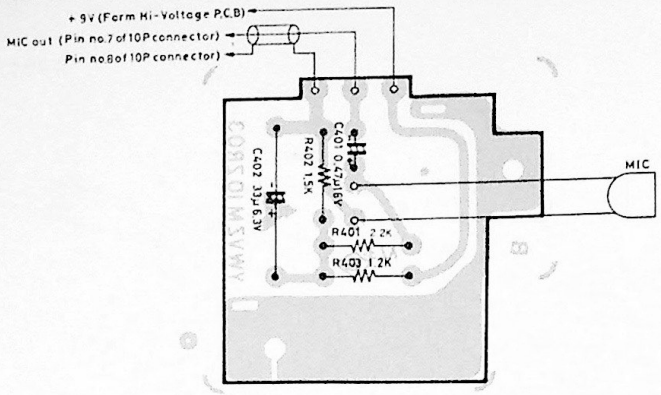

Microphone Circuit Board

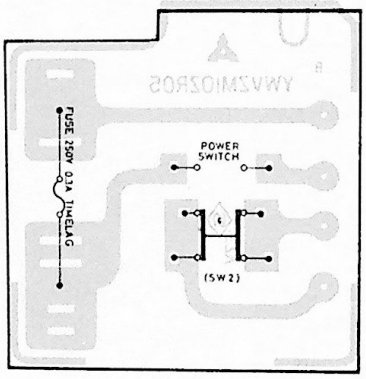

Power Switch Circuit Board

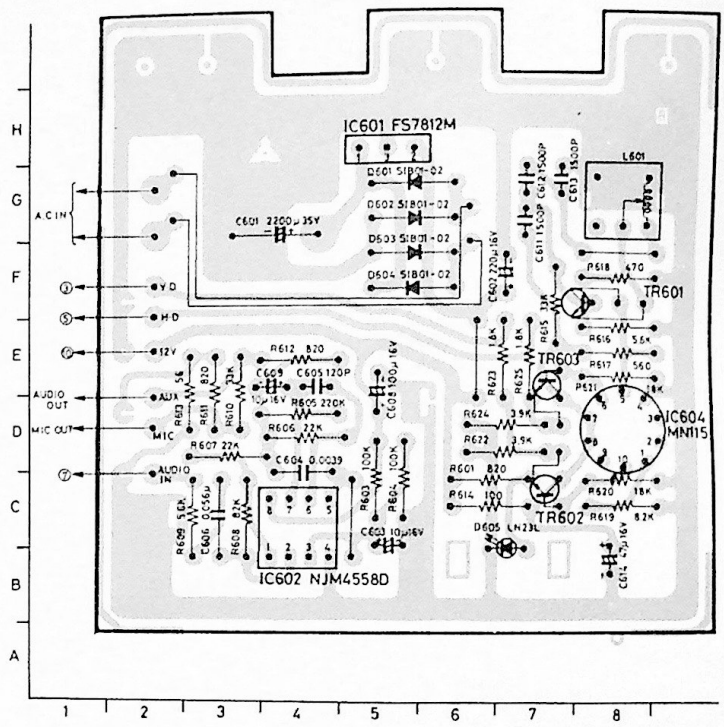

H-V Drive Pulse Osc. Circuit Board

PRODUCT SAFETY NOTE

Shaded components have special characteristics important to safety. Before replacing any of these components read carefully the Product Safety Notice on page 2 of this Service Data. Don't degrade the safety of the set through improper servicing.

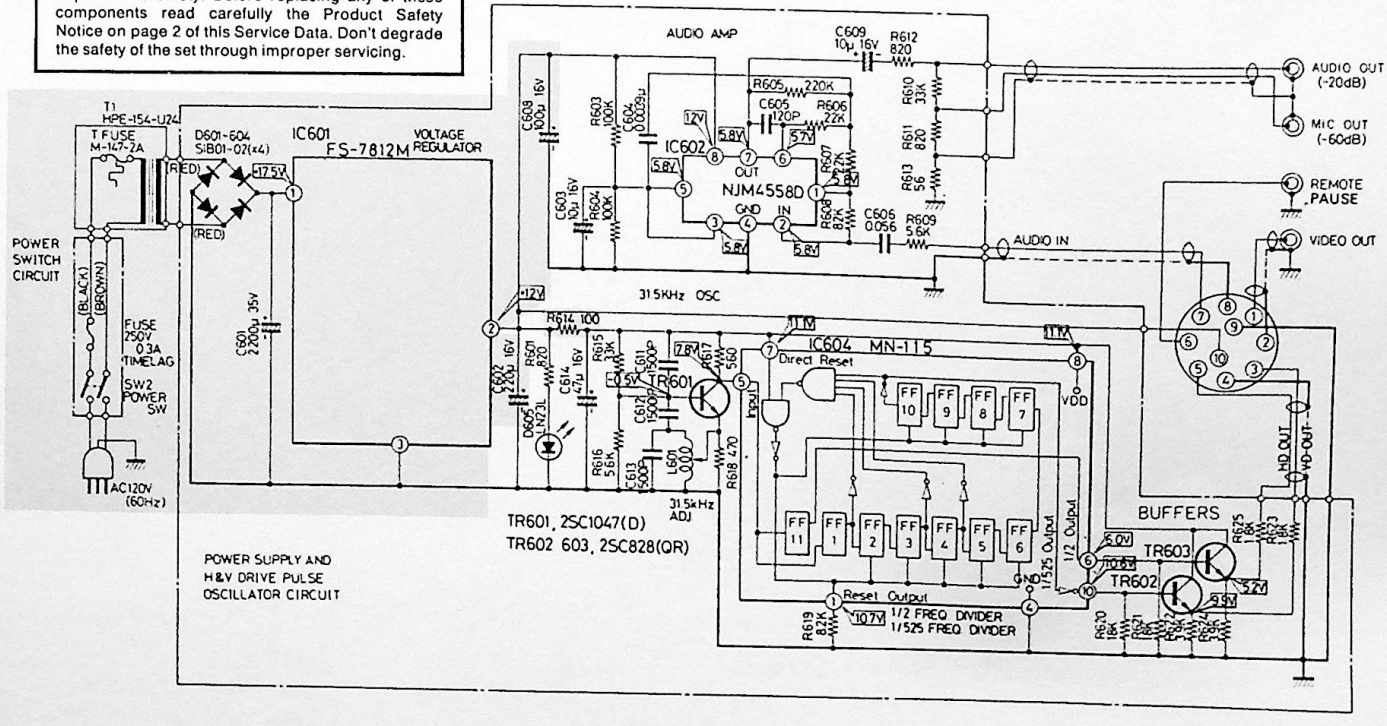

Power Supply Schematic

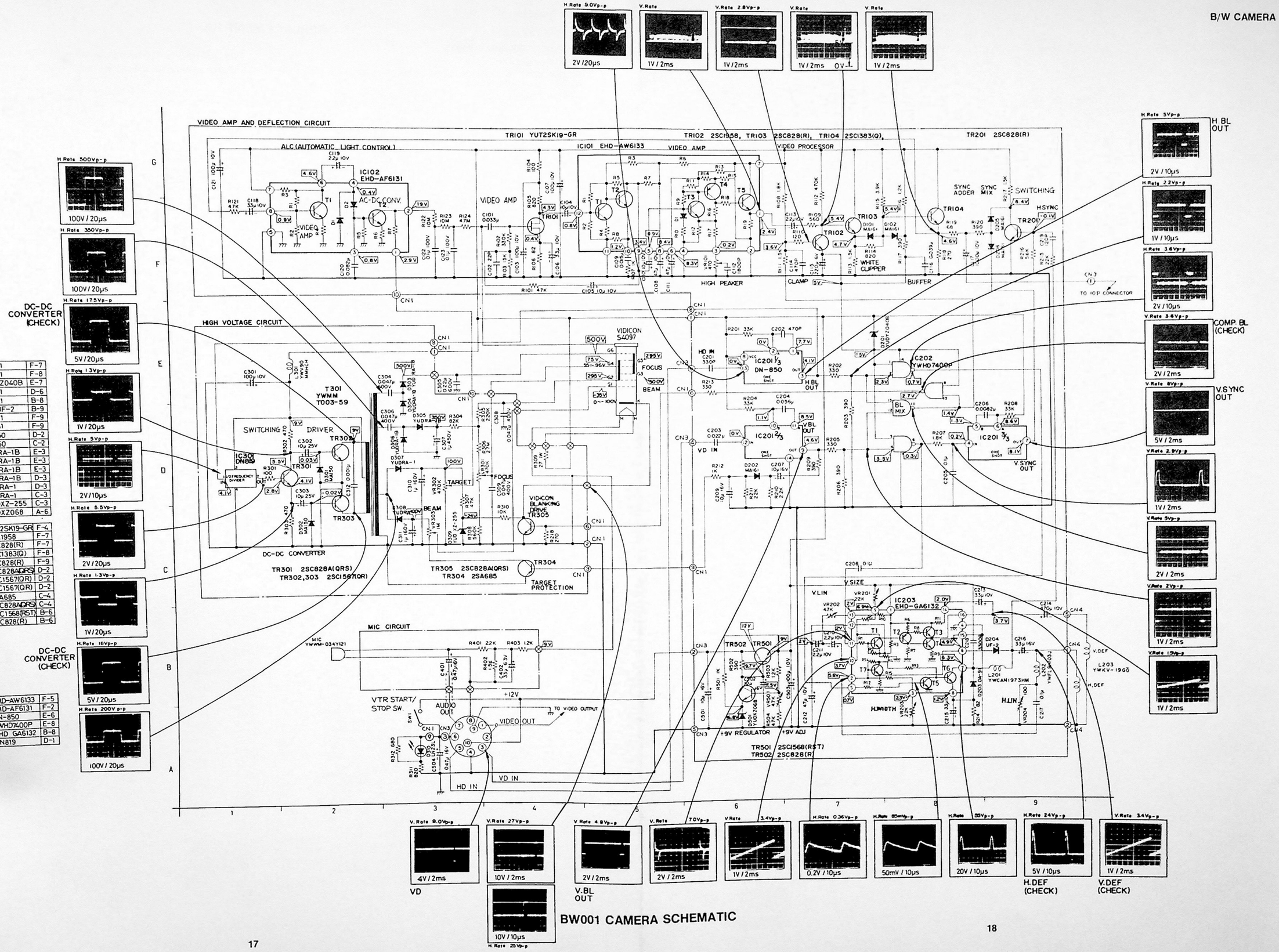

D101	MA161	F-7
D102	MA161	F-8
D201	YUDYZ040B	E-7
D202	MA161	D-6
D203	OA-91	B-8
D204	YUDUF-2	B-9
D205	MA161	F-9
D206	MA161	F-9
D301	MA150	D-2
D302	MA150	C-2
D303	YUDRA-1B	E-3
D304	YUDRA-1B	E-3
D305	YUDRA-1B	E-3
D306	YUDRA-1B	D-3
D307	YUDRA-1	D-3
D308	YUDRA-1	C-3
D309	YUDXZ-255	C-3
D501	YUDXZ068	A-6

TR101	YUT2SK19-GR	F-4
TR102	2SC1958	F-7
TR103	2SC828(R)	F-7
TR104	2SC1383(Q)	F-8
TR201	2SC828(R)	F-9
TR301	2SC828A(QRS)	D-2
TR302	2SC1567(QR)	D-2
TR303	2SC1567(QR)	D-2
TR304	2SA685	C-4
TR305	2SC828A(QRS)	C-4
TR501	2SC1568(RST)	B-6
TR502	2SC828(R)	B-6

IC101	EHD-AW6133	F-5
IC102	EHD-AF6131	F-2
IC201	DN-850	E-6
IC202	YWHD7400P	E-8
IC203	EHD GA6132	B-8
IC301	DN819	D-1

BW001 CAMERA SCHEMATIC

IC's and Transistors Basing Guide

EHDAF 6131
EHDAW6133
EHDGA 6132

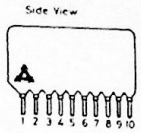

DN 819

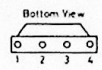

FS-7812M

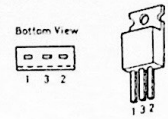

DN 850
HD 7400

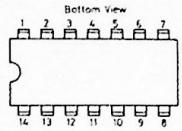

2SC1567
2SC1568

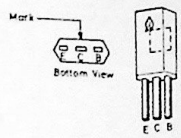

2SC 1047
2SA 685
2SC 828, 828A
2SC 1383



NJM 4558D

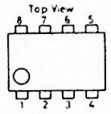

2SC1958



MN 115

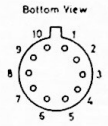

2SK19GR



Integrated Circuit

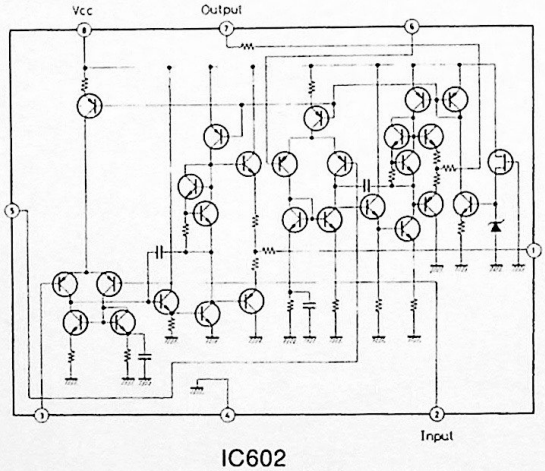

IC602

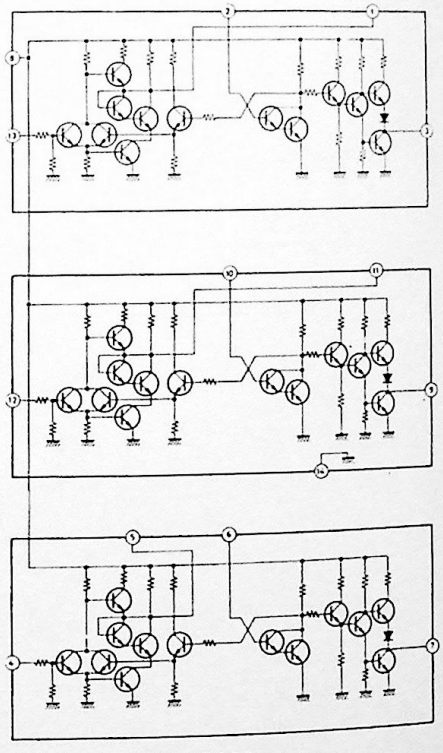

IC201

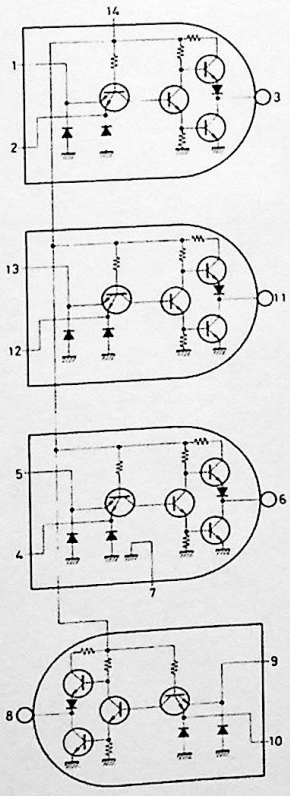

IC202

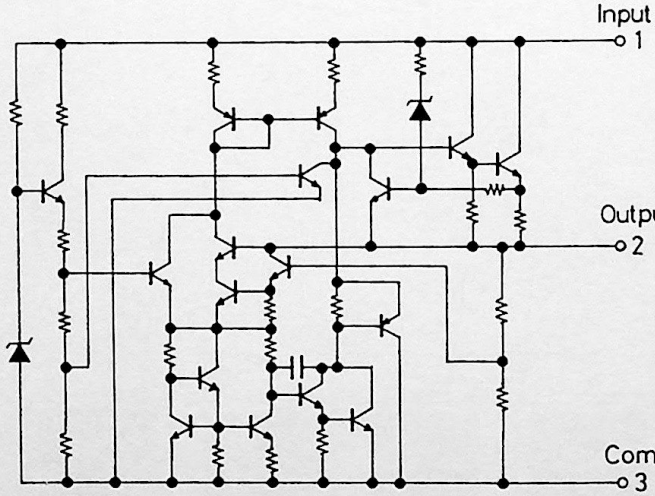

IC601

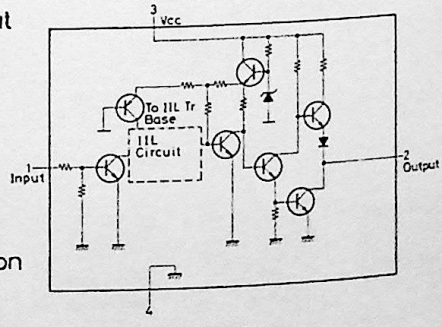

IC301

REPLACEMENT PARTS

WARRANTY STATUS OF PARTS

Vidicon - 6 months only.

All other parts, except cabinet parts, are eligible for warranty replacement as discrete components.

Cabinet parts must have prior approval of RCA for warranty replacement.

Warranty status of assemblies and parts is subject to change without notice.

PRODUCT SAFETY NOTE—Components marked with a (★) have special characteristics important to safety. Before replacing any of these components, read carefully the PRODUCT SAFETY NOTICE on page 2 of this Service Data. Don't degrade the safety of the set through improper servicing.

SYMBOL NO.	STOCK NO.	DRAWING NO.	DESCRIPTION
			CIRCUIT BOARDS
PCB1	144673		Circuit — complete video & deflection
PCB2	144674		Circuit — complete high voltage
PCB3	144675		Circuit — complete w/microphone
PCB4	144676		Circuit — complete power supply
PCB5	144677		Circuit — complete power switch
			CAPACITORS
C101	144639		.033 uf 10% 100V film
C102	144640		22pf 5% 50V NPO disc
C103	742045		100 uf 10V electrolytic
C104	742838		10 uf 10V tantalum
C105	742838		10 uf 10V tantalum
C106	742047		33 uf 10V electrolytic
C107	742045		100 uf 10V electrolytic
C108	144563		47 uf 10V electrolytic
C109	144562		.015 uf 10% 100V film
C110	742838		10 uf 10V tantalum
C111	144563		47 uf 10V electrolytic
C112	144641		1800 pf 5% 125V film
C113	144642		22 uf 100V tantalum
C114	741874		470 pf 5% 125V film
C115	139284		220 uf 6V electrolytic
C116	144643		.039 uf 10% 50V film
C117	129357		1000 uf 10V electrolytic
C118	742047		33 uf 10V electrolytic
C119	144642		22 uf 100V tantalum
C120	144644		.082 uf 10% 100V film
C121	742045		100 uf 10V electrolytic
C122	144645		.1 uf 10% 100V film
C123	144645		.1 uf 10% 100V film
C201	144646		330 pf 5% 125V film
C202	741874		470 pf 5% 125V film
C203	144647		.022 uf 10% 50V film
C204	144648		.056 uf 10% 100V film
C205	144649		.1 uf 10% 100V film
C206	144650		8200 pf 10% 100V film
C207	742023		10 uf 16V electrolytic
C208	144649		.1 uf 10% 100V film
C209	742023		10 uf 16V electrolytic
C210	144642		22 uf 100V tantalum
C211	144642		22 uf 100V tantalum
C212	144563		47 uf 10V electrolytic
C213	742047		33 uf 10V electrolytic
C214	144651		470 uf 10V electrolytic
C215	144652		33 uf 10V tantalum
C216	144653		33 uf 16V tantalum
C217	144649		.1 uf 10% 100V film
C218	144654		1300 pf 5% 125V film
C219	144655		120 pf 10% 100V NPO disc
C301	742045		100 uf 10V electrolytic
C302	144657		10 uf 25V electrolytic
C303	144657		10 uf 25V electrolytic
C304	144658		.047 uf 10% 600V film
C305	144659		.22 uf 10% 600V film
C306	144660		.047 uf 10% 400V film
C307	144661		1 uf 450V electrolytic
C308	144660		.047 uf 10% 400V film
C309	144660		.047 uf 10% 400V film
C310	144662		1 uf 160V electrolytic
C311	144662		1 uf 160V electrolytic
C312	144663		1000 pf 10% 100V Z5P disc
C401	144656		.47 uf 16V tantalum
C402	144664		33 uf 6V electrolytic
C501	742023		10 uf 16V electrolytic
C502	742023		10 uf 16V electrolytic
C503	742045		100 uf 10V electrolytic
C504	144656		.47 uf 16V tantalum
C601	144665		2200 uf 35V electrolytic
C602	144666	★	220 uf 16V electrolytic
C603	742023	★	10 uf 16V electrolytic
C604	144667		3900 pf 10% 100V film
C605	144668		120 pf 5% 125v film
C606	144648		.056 uf 10% 100V film
C608	742021		100 uf 16V electrolytic
C609	144669	★	10 uf 16V tantalum
C611	144670		1500 pf 5% 125V film
C612	144670		1500 pf 5% 125V film
C613	144670		1500 pf 5% 125V film
C614	144563		1500 pf 5% 125V film
			CONNECTORS
CN1-J	144616		Microphone
CN2-J	144617		Remote control
CN3-J	144618		Audio output
CN4-J	144619		Rf
CN5-J	144620		10 pin
CN3-P	144724		6 pin plug female
CN4-P	144723		5 pin plug female
CN5-P	144725		Socket — vidicon tube
			DIODES
D101	144691		
D102	144691		
D201	144692		
D202	144691		
D203	144693		
D204	144694		
D205	144691		
D206	144691		
D301	144581		
D302	144581		
D303	144696		
D304	144696		
D305	144696		
D306	144696		
D307	144697		
D308	144697		
D309	144698		
D310	144699		
D501	144695		
D601	144700	★	
D602	144700	★	
D603	144700	★	
D604	144700	★	
D605	144699		
F1	144713		★ Fuse
			INTEGRATED CIRCUITS
IC101	144678		IC
IC102	144679		IC
IC201	144023		IC
IC202	144680		IC
IC203	144681		IC
IC301	144022		IC
IC601	144682	★	IC
IC602	144683		IC
IC604	144684		IC
L201	144701		Coil
L202	144702		Coil
L203	144722		Coil — deflection
L301	144703		Coil
L601	144704		Coil
			RESISTORS
R101	429826		4.7k ohm 5% 1/8W
R102	436537		330k ohm 5% 1/8W
R103	425261		15k ohm 5% 1/8W
R104	246910		100 ohm 5% 1/8W
R105	429822		820 ohm 5% 1/8W
R106	431023		82 ohm 5% 1/8W
R107	428612		1k ohm 5% 1/8W
R108	433319		1.8k ohm 5% 1/8W
R109	433123		560 ohm 5% 1/8W
R110	429816		120 ohm 5% 1/8W
R111	427815		1.5k ohm 5% 1/8W
R112	429836		470k ohm 5% 1/8W
R113	427815		1.5k ohm 5% 1/8W
R114	429822		820 ohm 5% 1/8W
R115	430554		3.9k ohm 5% 1/8W
R116	431026		1.2k ohm 5% 1/8W
R117	429819		390 ohm 5% 1/8W
R118	144631		270 ohm 5% 1/8W
R119	741886		68 ohm 5% 1/8W
R120	429819		390 ohm 5% 1/8W
R121	429826		4.7k ohm 5% 1/8W
R122	144632		10m ohm 10% 1/4W film
R123	144632		10m ohm 10% 1/4W film
R124	144633		4.7m ohm 10% 1/4W film
R201	427816		33k ohm 5% 1/8W
R202	741882		330 ohm 5% 1/8W
R203	429819		390 ohm 5% 1/8W
R204	427816		33k ohm 5% 1/8W
R205	741882		330 ohm 5% 1/8W
R206	429819		390 ohm 5% 1/8W

REPLACEMENT PARTS

(continued)

PRODUCT SAFETY NOTE—Components marked with a (★) have special characteristics important to safety. Before replacing any of these components, read carefully the PRODUCT SAFETY NOTICE on page 2 of this Service Data. Don't degrade the safety of the set through improper servicing.

SYMBOL NO.	STOCK NO.	DRAWING NO.	DESCRIPTION
R207	433319		1.8k ohm 5% 1/8W
R208	427816		33k ohm 5% 1/8W
R209	429819		390 ohm 5% 1/8W
R210	429824		2.3k ohm 5% 1/8W
R211	429830		22k ohm 5% 1/8W
R212	428612		1k ohm 5% 1/8W
R213	741882		330 ohm 5% 1/8W
R214	431023		82 ohm 5% 1/8W
R215	429830		22k ohm 5% 1/8W
R216	422020		5.6k ohm 5% 1/8W
R217	427815		1.5k ohm 5% 1/8W
R218	144631		270 ohm 5% 1/8W
R301	246910		100 ohm 5% 1/8W
R302	429280		470 ohm 5% 1/8W
R303	429280		470 ohm 5% 1/8W
R304	144634		82k ohm 1% 1/4W metal film
R305	144635		220k ohm 1% 1/4W metal film
R306	144636		2.7M ohm 100 PPM metal film
R307	425269		47k ohm 5% 1/8W
R308	144637		560k ohm 100 PPM metal film
R309	144638		270 ohm 5% 1w metal film
R310	429828		10k ohm 5% 1/8W
R311	429822		820 ohm 5% 1/8W
R312	429821		680 ohm 5% 1/8W
R401	429824		2.3k ohm 5% 1/8W
R402	427815		1.5k ohm 5% 1/8W
R403	431026		1.2k ohm 5% 1/8W
R501	428612		1k ohm 5% 1/8W
R502	429819		390 ohm 5% 1/8W
R503	431026		1.2k ohm 5% 1/8W
R504	429826		4.7k ohm 5% 1/8W
R601	429822		820 ohm 5% 1/8W
R603	223769		100k ohm 5% 1/8W
R604	223769		100k ohm 5% 1/8W
R605	429835		220k ohm 5% 1/8W
R606	429830		22k ohm 5% 1/8W
R607	429830		22k ohm 5% 1/8W
R608	239466		82k ohm 5% 1/8W
R609	422020		5.6k ohm 5% 1/8W
R610	427816		33k ohm 5% 1/8W
R611	429822		820 ohm 5% 1/8W
R612	429822		820 ohm 5% 1/8W
R613	228878	★	56 ohm 5% 1/8W
R614	246910		100 ohm 5% 1/8W
R615	427816		33k ohm 5% 1/8W
R616	422020		5.6k ohm 5% 1/8W
R617	433123		560 ohm 5% 1/8W
R618	429280		470 ohm 5% 1/8W
R619	429827		8.2k ohm 5% 1/2W
R620	433417		18k ohm 5% 1/8W
R621	433417		18k ohm 5% 1/8W
R622	430554		3.9k ohm 5% 1/8W
R623	433319		1.8k ohm 5% 1/8W
R624	430554		3.9k ohm 5% 1/8W
R625	433319		1.8k ohm 5% 1/8W
SW1	144732		Switch — remote control
SW2			Switch — part of pcb5
T1	144615	★	Transformer — power
T301	144705		Transformer
			TRANSISTORS
TR101	144685		Video amp
TR102	144686		Clamp
TR103	144035		Clamp
TR104	144041		Buffer
TR201	144035		H-Sync
TR301	144687		Amp
TR302	144688		Amp
TR303	144688		Amp
TR304	144689		Target protection
TR305	144687		Vidicon blanking
TR501	144690		Regulator drive
TR502	144035		Regulator
TR601	144037		31.5 khz osc
TR602	144035		Vert drive
TR603	144035		Horiz drive
VR101	144706		Resistor — control high peaker
VR202	144707		Resistor — control horiz lin
VR203	144708		Resistor — control horiz width
VR204	144709		Resistor — vert lin
VR301	144710		Resistor — control focus
VR302	144711		Resistor — control target
VR303	144712		Resistor — control beam
VR501	144707		Resistor — control 9V adjust
V1	144721		Tube — vidicon
			CAMERA MISCELLANEOUS
M1	144671		View finder assembly complete less lens
M2	144755		Lens — for view finder
M3	144756		Hood — lens
M4	144742		Cable — camera assembly
M5			Microphone — part of pcb3
M12			Heatsink — part of pcb4
M15	144672		Bushing — camera cable
M16	144726		Screw 5/package
M17	144727		Support — vidicon
M18	144728		Spring 1/package
M19	144729		Magnet — centering
M20	144730		Cover — left
M21	144731		Knob — guide
M22	144714		Overlay — left side
M23	144715		Knob
M24	144716		Bracket
M25	144720		Holder — diode light emitting
M26	144717		Overlay — right side
M27	144718		Cover — right
M30	144733		Chassis — front
M31	144734		Ring
M35	144735		Support — mic
M36	144736		Hood — microphone
M37	144737		Ring — front
M38	144738		Coil — guide
M39	144739		Chassis — main
M42	144740		Lens — standard
	144747		Screw — xsb3+6fn 10/package
	144743		Screw — xsb3+6fx 10/package
	144380		Screw — xsb3+6fxk 10/package
	144746		Screw — xtn3+6fx 10/package
	144745		Screw — xsb3+8fx 10/package
	144748		Screw — xtn3+10fxk 10/package
	144744		Screw — xsb3+12fx 10/package
	144361		Screw — xtn3+12cfxk 10/package
	144329		Screw — xsb26+6fxk 10/package
	144757		Power supply complete
			POWER SUPPLY MISCELLANEOUS
M44	144625		Case
M45	144624		Foot — rubber
M46	144623		Grommet — power cord
M47	144719		Holder — led
M48	144627		Knob — AC power
M49	144626		Panel — front
M50	144622		Panel — rear
M51	144621		Insulator — for CN1—J
M52	168207	★	Power cord — AC power
			ACCESSORIES
M53	144630		Cable — Audio
M54	144629		Cable — Remote
M55	144628		Cable — Rf
	144830		Cable—Camera Extension Cable 20 ft.
		1423615-1	Book — Customer Instruction

Specifications Subject to Change Without Notice

CONSULT YOUR RCA DISTRIBUTOR FOR REPLACEMENT PARTS AND ACCESSORIES

RCA

FILE
VCR-1

Video Cassette Recorder VHS SERVICE INFORMATION

and Supplement(s)

CONTAINS ADDITIONAL SERVICE DATA INFORMATION. FILE WITH DATA INDICATED.

Model VBT200

RCA Corporation
Consumer Electronics
Technical Publications
600 N Sherman Dr | Indianapolis, Indiana 46201

Date: January 27, 1978

Subject: VBT200 Video Cassette Recorder (VCR)Troubleshooting Hints

This bulletin is designed to aid the technician in servicing the VBT200 Video Cassette Recorder (VCR) by tabulating troubleshooting hints which are compiled from field reports of servicing incidents. The various symptoms that have been encountered are listed under **Symptom Description** and the part(s) that caused the symptom is listed under **Components.**

TRANSPORT ELECTRONICS

Symptom Description	Component
Unit does not load or unload.	Worm gear mounted on loading motor shaft does not rotate. Allen screw which locks gear to shaft is loose.
	Defective loading motor.
After 1½ to 2 hours of operation unit would not "rewind." (Stop solenoid activated when Rewind key is depressed).	TR 6303 Take-up photo transistor defective (Should read about 4.5V from collector to ground. Voltage drops to approximately 2.5V when TR 6303 is defective).
When unit is hot it goes into stop mode, will not advance in play or fast forward.	Defective supply photo transistor TR6302.
	R6106.
Power "on" indicator lights, won't go into any mode.	Defective sensor lamp PL 6301.
VCR turns "on", then shuts "off" after 5 seconds. D-D cylinder won't turn.	Defective D-D cylinder -378.
Loads, then shuts down.	Bent pressure roller arm - 20.
Loads, then shuts down. Pinch solenoid not working.	No connection at P64-7.
Remote pause does not work.	Tightened J6301 connection.
Will not load unless PLAY key is held down.	Adjust tape slack (play #2) switch S6306.
Runs short time then stops (power indicator off).	TR 632.
Runs short time then unloads (D-D cylinder stops).	TR 633.
No tape movement.	Turn remote pause switch off.

TRANSPORT MECHANICAL

Symptom Description	Component
Following complete "rewind" unit will not play or record.	Cassette holder top cover contacting cassette. To correct loosen four screws, raise cover to its maximum upward travel and re-tighten screw.
Cassette holder jammed in down position.	Lever - 85 which opens the cassette door when cassette is inserted, is bent . Lever is usually bent when cassette is inserted wrong.
Unable to lower cassette holder into machine.	Reshape cassette door opener - 85.
Cassette will not load, bent tape guide post (P2).	Disassembled loading assembly, replaced spring - 70. Had to adjust control track head position.
Cassette will not load, loading posts (67 or 68) bent and/or loose.	Disassembled loading assembly. Replaced spring - 70.
Difficult to press down cassette holder.	Readjusted cassette holder.
Cassette will not come out.	Adjusted cassette lock arm assembly.
"Eats" tape.	Replaced left loading post - 68.
Cassette door won't open.	Reformed cassette door opener - 85.

SERVO/MOTOR DRIVE

Symptom Description	Component
Picture tears, intermittent capstan speed. Could not make capstan free run adjustment (R215). Trapezoid missing at TP 205.	TR 203 open.
	TR 201 (E/B Short).
Picture tears, intermittent capstan speed, free run adjustment R215 has no effect.	TR 205 defective transistor (measures okay).
Capstan speed off, trapezoid okay, control pulse floating, R215 has no effect.	TR 207 leaky C/E.
Intermittent tape speed. Pulse amplitude intermittently varying at TP 204.	Resolder pin #18 on IC 201.
D-D cylinder noisy, especially at turn "off" when the cylinder is slowing down.	Defective D-D cylinder - 378.
During playback video comes and goes intermittently.	Traced to intermittent connection at P612.
Poor picture quality, noisy, bending, flagging.	Cleaned heads, adjusted PG shifter, cylinder and capstan free run, tracking fix, record shifter, head balance.
Tape speed increases noticeably after warm up. Noise only in play.	IC 201.
Records in LP but not in SP.	TR 6403.
Loss of sync on prerecorded tape.	TR 2105.
Capstan speed increases after one hour.	IC 201.
D-D cylinder hunting, no horizontal sync.	IC 801, X801.
D-D cylinder motor erratic, no color and poor horizontal sync on playback.	L811 open.
	L801 open.
Runaway condition of D-D cylinder five minutes after instrument is turned on.	Intermittent IC 2102.

PLAY

Symptom Description	Component
No playback (snow, cylinder servo hunting).	No B+ to IC 802, coil L806 open.
No playback.	Replaced RF converter module (144002).
No chroma on playback.	IC 801 defective.
Records okay, no playback. Looks like fine tuning off. Some color in background.	IC 303 defective.
Would not play recorded program.	Fine tuning misadjusted on TV receiver.
No horizontal sync on playback, record okay.	IC 805 defective (3.58 okay, no 60 Hz output).
Sound level fluctuates on record.	Replaced defective audio control head - 147. Cleaned and adjusted audio control head - 147.
Weak sound in playback.	Adjusted audio head azimuth and playback audio gain control R405.
Momentary video mute-LP mode only.	Wrinkles along bottom edge of tape.
Noisy picture.	Replaced bent capstan - 2. Cleaned drive surfaces.
No color, no horizontal sync on play. Capstan motor hunts on playback, no 2μ sec. pulse at TP 811 and elevated voltages on IC 803.	L811 open caused no horizontal sync. Defective IC 803 caused no color.
Intermittent loss of video in play mode (Customer tape).	Recording was made during an electrical storm. It appears that lightning flashes during record produces video dropout on VCR. A similar condition was reported in a poor reception area with heavy auto ignition interference.
Records but will not play back.	Repair solder connection at FL305 (ceramic filter).
In play mode speed changes when LP/SP switch is actuated, VCR tuner will select active channels with live video but prerecorded audio.	Repair S201 Play/Record switch (jammed in record position).

RECORD

Sympton Description	Component
Cannot record after unit is reassembled.	When Servo Board was returned from service to normal position, cable prevented Record switch on Servo Board from being activated.
Weak, smeared video, record only.	TR 306 shorted.
No color on record, will play a prerecorded tape normally.	Defective IC 802.

RECORD/PLAY

Symptom Description	Component
Noisy picture in LP mode.	Replaced upper cylinder assembly -377 (includes video heads).
No video, play or record, sound okay.	Replaced defective upper cylinder assembly -377 (includes video heads).
Weak chroma, very high contrast, washed out highlights, sync compressed.	Color Killer transistor TR 820.
No playback or record.	Defective IC 802.
No video on record or play.	Replaced upper cylinder assembly - 377 (includes video heads).
No sound, intermittent sound.	A/C head - 147.
Will not play or record in color.	IC 801.
	T802 and TR 806.
Poor, noisy picture on playback - output from only one head.	IC 502.
Would record and play back color on itself but no color from tapes recorded on other machines nor would tapes made on this machine play back in color on other machines. Reasonable B/W picture (beat present).	IC 802 (2.517 MHz was approximately 3.4 MHz).
Noisy record/playback.	Replaced upper cylinder assembly - 377 (includes video heads).

E to E/MISCELLANEOUS

Symptom Description	Component
Intermittent color, poor sound.	Adjusted VHF fine tuning.
Channel numbers off, no color on 9.	Aligned VHF tuner knob, adjusted channel 9 VCR fine tuning.
Picture snowy in VCR or TV position.	Replaced antenna select circuit (144167).
	Replaced antenna matching adapter (144288).
Picture snowy in VCR position.	VCR/TV switch not fully locked in VCR position.
Snowy picture.	Soldered center lead of 72 ohm connector going to antenna switch.
UHF channels snowy.	Replace UHF tuner.
Poor picture and sound on tape recorded on machine, prerecorded tapes okay.	Caused by hum from antenna amplifier.
Ghost in VCR input tuner position.	Loose connection at tuner IF link.
Looks like TV RF oscillator drift.	Replaced RF converter module (144002).

POWER SUPPLY

Symptom Description	Component
On/Off Indicator does not light.	LED (indicator) defective.
Completely inoperative.	D101 shorted, F102 open.
Won't operate with timer.	D647 not soldered at one end.
Streaks and smears in play.	TR 6301.
Digital timer inoperative, intermittent, wrong display, etc.	Replaced digital timer (144004).
VHF dial lamp (D6302) does not light.	Repaired solder connection at lamp (D6302, LED).

RCA

FILE
VCR-1

Video Cassette Recorder VHS SERVICE INFORMATION

and Supplement(s)

CONTAINS ADDITIONAL SERVICE DATA INFORMATION. FILE WITH DATA INDICATED.

Model VBT200

RCA Corporation
Consumer Electronics
Technical Publications
600 N Sherman Dr. | Indianapolis, Indiana 46201

Date: February 3, 1978

Subject: Cassette Will Not Eject -- VBT 200

Symptom:

Cassette is jammed in lowered (loading) position, i. e., cassette holder does not raise when EJECT key is pressed.

Possible Causes:

1. The cassette holder is lowered before the cassette is completely inserted.
2. The cassette is inserted correctly, but the cassette holder is lowered by pressing on the rear portion (area away from function keys) of the holder.
3. Cassette is not parallel with cassette guide bar when lowered -- either due to incorrect insertion or cassette holder alignment.

Any of the above can cause the cassette opener(No. 85) to contact the front surface of the cassette door rather than the bottom edge. As a result, if the cassette holder is forced down, the cassette will be wedged against the cassette opener(No. 85) and will not raise when the EJECT key is pressed.

Corrective Action:

1. Remove the jammed cassette: A) Remove the top panel (remove rear panel first); B) Remove the plastic cassette holder cover (four screws); C) Remove the cassette.
2. Place the cassette holder jig (stock no. 144394) in position. Straighten and adjust the cassette opener(No. 85) so that it is centered in the slot on the right front side of the jig.

(OVER)

VBT200 Service Information No. 2

3. Loosen the four screws, two on each side, that attach the cassette holder to the transport. Pull back on the cassette holder until the two tabs (located in the front of the cassette holder) are firmly touching the cassette holder jig. At the same time make sure the rear brackets of the cassette holder are parallel, then tighten the four screws.

4. Remove the jig, replace the plastic cassette holder cover and check cassette load/unload operation (with a cassette) before replacing the top and rear panels.

5. To prevent callbacks, instruct the VCR user on the correct cassette loading procedure:

   A. Make sure the cassette is all the way forward and straight (do not force).

   B. To lower the cassette holder, press on the front of the holder cover (area nearest the Function Keys).

   C. <u>Do not force the holder down</u>.